LIFAN POWER USA

PRO SERIES

MODELS Available **LF4000(E)-CA** **LF7250(E)-CA** **LF8750iE-CA**

PRO SERIES GENERATORS

Operating Instructions and Owner's Manual

PLEASE READ THIS MANUAL CAREFLLY BEFORE OPERATING YOUR NEW PRO SERIES GENERATOR
(CA) in the Model Number designates California Compliant by CARB 1/12/2015

Operating Instructions

And

Owner'sManual

PRO SERIES

LF4000-(CA), LF7250-(CA)

LF8750iE-(CA)

Record Purchase Here

Model # _____

POWERED BY LIFAN CARB/EPA CERTIFIED PRO SERIES

Engine ID # _____

(Unique Identifier stamped on engine crankcase)

Date of Purchase _____

Purchase Location _____

PLEASE KEEP AND READ THIS MANUAL CAREFULLY BEFORE

OPERATING YOURNEWPORTABLEGENERATOR

(-CSA-CA)IndicatesthisunitisCSA (Canadian Compliant)

And CARB Certified (California Compliant)

(E)Indicatesthisunitis

EquippedwithElectricStart

PLEASE READTHE

FOLLOWINGINSTRUCTIONS!

1. Unit Shipped with “NO OIL” in Engine or where applicable pumps and/or accessories. Check and fill with proper oil as outlined in the Owner’s Manual for the respective product.

2. For repair under Warranty or questions concerning Warranty, DO NOT return this product to the Store where purchased. Follow the procedures as outlined in the “WARRANTY POLICY” and “WARRANTY REGISTRATION” in the Owner’s Manual. For any questions visit www.lifanpowerusa.comor call 1-866-471-7464 OPTION 1.

3. Read the “Owner’s Manual” prior to operating anyequipment and familiarize yourself with the proper and safe operation of the equipment. If you have any questions visit www.lifanpowerusa.comorcall 1-866-471-7464.

LF4000-CA	**LF7250-CA**	**LF8750iE-CA**

POWERED BY LIFAN CARB/EPA CERTIFIED PRO SERIES

(LF) Indicates this unit is a LIFAN Power USAProduct

(-CA) Indicates this unit is CARB Certified for California

(E) Indicates this unit is equipped with ElectricStart

(I) Indicated the unit is equipped with Auto Idle Feature

Table ofContents

Preface

Thank you for choosing LIFAN Power USA for your Power Equipment Needs.LIFANPower USA prides itself on providing quality products at affordable pricing, creatingthe“Best Equipment Value on

Today's Market!"

All LIFAN Power USA products are manufactured utilizing the latest technology.Builtwithqualitycomponents,yournewPowerEquipmentProductwillgiveyouyearsof dependable service. Your unit, along with all of LIFAN Power USA products a r e designed, engineered, and manufactured with LIFAN's Industrial Grade GasolineEngine.

ThisOwner'sManualwillprovideyouwithallofyourneededinformationforyournew PowerEquipmentProduct,includingSafeOperation and Maintenanceof yourunit. PleasereadthisOwner'sManualcompletelyandcarefullypriortooperation. Keepthis Owner'sManualforassistanceinthefuture,suchaspropermaintenanceschedulesand tipstoprolongthelifeandeffectiveuseofyourunit. Ifyourequireassistance,please visit ourwebsite (www.lifanpowerusa.com) orcall toll free866-471-7464 OPTION 2.

ThisOwner'sManualcontainsinformationwithrespecttothenewestproductsatthetimeofpublication.Du etorevisionandmodifications,theinformationnotedintheOwner'sManualmightvaryfromtheactualstatu s.ThisOwner'sManualissubjectto change without notice. The copyright of this Owner's Manual belongs toEquipSource,LLC. Any group or individual is forbidden to reprint or copy any of this Owner'sManual without the written consent of EquipSource,LLC.

FOR ALL WARRANTYANDSERVICERELATED ISSUES/QUESTIONSDONOTRETURN YOURUNITTOTHESTOREORDEALERWHERETHEITEMWASPURCHASED.

FOR SERVICE VISIT LIFAN POWER USA'S WEBSITE(WWW.LIFANPOWERUSA.COM) OR CALL 1-866-471-7464 OPTION 2. WE WILLBEHAPPY TOHANDLEYOUR WARRANTYISSUE OR DIRECT YOU TO THENEAREST "AUTHORIZED SERVICE CENTER."

SAFETYRULES

For your safety read this manual carefully.Becomefamiliar with the proper operation, care, andmaintenance of your Lifangenerator

.

The safety and alert symbol (**A**)is used with a signalword(CAUTION,DANGER,WARNING),apictorialand/orsafetymessageto alert you to hazards. CAUTION indicates a hazard which, ifnotavoided could be harmful.

might result in minor or moderate injury.DANGERindicates a hazard which, if not avoided, will result in deathorseriousinjury.WARNINGindicatesahazardwhich,ifnotavoided,could result in death or seriousinjury.

A **WARNING!**

Rapidrecoilofstartercord(kickback) maypullhandandarmforward towardengineatarapidrate.

Brokenbones,bruises, sprains,and

- Whenstartingengine,pullcordslowlyuntil Tensionisfelt,thenpullrapidlytoavoid kickback.
- Neverstartorstopenginewithelectrical

Generatorproducespowerfulvoltage!

Onlyalicensedelectriciancansafely Connect hookups. Failuretoisolate generatorfrom electricalgridcanresult

- Whenusinggeneratorasbackuppower,notify Utilitycompany.Useapprovedtransfer equipmenttoisolategeneratorfromelectric utility.
- DoNotoperategeneratorwhileexposedto Rainorotherwetconditions.
- Donotha ndlegenerato when in contact with water.
- Donotcontactbarewiresorreceptacles.
- Inspectallelectricalcordsfordamageand

WARNING!

Running generator emits carbon monoxide an odorless, colorless, poison gas.
Breathing carbon monoxide can cause nausea or death!

Exhaustgasmustbepreventedfromenteringconfinedareas.

Directexhaustgasawayfromwindows,doors,ventilation and

Donotoperategeneratorinsidearunderanybuildings. Operating thisgeneratorinsidethecompartmentofa recreationalvehiclewilllikelyresultindeath

ThisgeneratordoesnotmeetU.S.CoastGuardRegulation 33CFR-183andshouldnotbeusedonmarineapplications.
UseofthisgeneratorinmarineapplicationscouldresultinseriousinjuryordeathS.

WARNING!	
	Fuel and its vapors are extremely flammable andexplosive.
	Fire or explosion can cause severe burns ordeath

POWERED BY LIFAN CARB/EPA CERTIFIED PRO SERIES

WHEN ADDING OR DRAININGFUEL

- Turn generator off and let it cool for at least three minutes before removing fuel cap. Loosen cap slowly in ordertorelieve pressure in the fueltank.
- Fill or drain fuel tank outdoors. Do not excessively inhale fuelvapors.
- Keep away from open flames or sparks and other sources ofignition.
- Do NOT smoke while filling fueltank.
- Do NOT overfill tank. Allow space for fuelexpansion.

WHEN TRANSPORTING OR REPAIRING EQUIPMENT

- Transport generator with the fuel valve in the offposition.
- Repair generator with the fuel tank empty or the fuel valve in the offposition.
- Disconnect spark plug wire before transport orservice.

WHEN STORING FUEL OR EQUIPMENT CONTAININGFUEL

- Store away from furnaces, stoves, water heaters, clothes dryers or other appliances that have pilot light orotherignition source because they can ignite fuelvapors.

⚠ CAUTION!

Excessivelyhighoperatingspeeds(enginerevolutions)increasetheriskofinjuryanddamagetothegenerator.Excessively low speeds impose a heavy load and will damagegenerator.

- Do NOT adjust engine speed governor. Generator supplies correct voltage and frequency at designatedspeed.

WARNING!

While engine is running temperature may exceed 150°F(65°C).Server burns mayoccur.

- Do NOT touch hot surfaces and do avoid exhaust gasses.
- Allow generator to cool before touching.
- Keep at least 7 ft. (183cm) clearance on all sides of generator including overheadclear.
- Reflective exhaust heat may damage fuel tank causingfire.

WARNING!

Unintentional sparking can result in fire orelectrical shock.

WHEN TESTING FOR ENGINESPARK

- Do NOT check for spark with the spark plugremoved.
- Use approved spark plugtester.

WHEN REPAIRING OR ADJUSTINGGENERATOR

CAUTION!

Improper use and care of this generator will cause damage and shorten its lifespan. Failure to follow these actions will voidallwarranties.

- Use generators only for appropriate and designatedpurposes.
- Thedealerorcustomerhelpline(1-866-471-7464)caninstructyouonintendeduses.
- Generator must be placed on a levelsurface.
- Do NOT expose generator to extreme conditions. Excessive dust, moisture, and corrosive vapors will damageunit.

Generator Safety

1. Never operate gasoline engine powered products in any enclosed spaces,asthey product deadly Carbon Monoxide PoisonousGases.
2. Never hook a generator directly to your home circuit without theproper installation by a Licensed Electrician and without the proper powertransfer devices.
3. Do NOT operate your power equipment in inclement weather such asrain,snow, and/or sleet.
4. Do NOT operate your power equipment within five (5) feet of anyflammable materials.
5. When refueling the power equipmentnever smoke or refuelnear any flame or ignitiondevices. Never refuel whiletheunitisrunning. If duringthe refueling processsome fuelisspilled,alwayscompletely cleanthe fuelandallow sufficientdrying time priorto re-startingtheunit. Gasoline vaporsignite easily andare verydangerous.
6. Do NOT parallel connect this model. Generator cannot be combinedwithother electric wires or multiple socketboxes.
7. Do NOT lengthen the exhaust pipe or vent it with anyextension.
8. Use SJ or SJO type extension cords ifnecessary.
9. Do not use extension cords exceeding: 16 Gauge, 200ft or 10 Gauge,330ft.
10. NEVER ALLOW CHILDREN OR ANIMALS TO BE NEAR THIS EQUIPMENTDURING OPERATION. ONLY QUALIFIED PERSONS SHOULD OPERATE THISEQUIPMENT. FOLLOW ALL GUIDELINES CONTAINED IN THIS OWNER'S MANUAL FORTHESAFE OPERATION OF THISEQUIPMENT.

Products Specifications

PORTABLE GENERATORS

ModelSize	LF4000-CA	LF7250-CA	LF8750iE-CA
Voltage	120/240VAC&12VD	120/240VAC&12VDC	120/240VAC&12VDC
ACSurgeOutput1	4000Watts	7250Watts	8750Watts
RatedACOutput2	3500Watts	6500Watts	7500Watts
MaximumACAmperage	28amps@120V	48amps@120V	62amps@120V
ACCycle	60Hertz	60Hertz	60Hertz
Brushless Altenator	Storage Capacitor	AVR3	AVR3
12V8.3ampDCReceptacle	2ea.	2ea.	2ea.
120V20ampACGFCIReceptacle	1ea.	2ea.	2ea.
120V30ampACTwistLockRecept	N/A	1ea.	1ea.
120/240V30ampACTwistLockRe	1ea.	1ea.	1ea.
USB Port	1 ea	1 ea	1 ea
CircuitProtection	MasterCircuitBreaker	MasterCircuitBreaker	MasterCircuitBreaker

ENGINE

Manufacturer	LIFAN	LIFAN	LIFAN
Model	LF168F2-13111	LF188FI-13111	LF190FD-13111
Maximum Horsepower(MHP)	6.5MHP	13MHP	15MHP
EngineDisplacement	196cc	388cc	420cc
StartingSystem	Recoil	Recoil	Recoil/Electric
Fuel TankCapacity	4 Gallons	7.5Gallons	7.5Gallons
Fuel TankMaterial	RustPreventativeCoat	RustPreventativeCoate	RustPreventativeCoate
Run Time (@ 50%Load)	10hours	10hours	10 hours
Sound Level (@ 7m or23ft)	65decibels	75decibels	75decibels
EngineType	4IStrokeOHV	4IStrokeOHV	4IStrokeOHV
FuelType	Automotive Grade	Automotive Grade	Automotive Grade
FuelCompliance	10% EthanolMix	10% EthanolMix	10% EthanolMix
Oil Type &Amount	SAE 10w30w20oz	SAE 10w30w32oz	SAE 10w30w32oz
Automatic IdleControl	N/A	N/A	Yes
Low Oil ShutoffProtection	Yes	Yes	Yes
CARBCertified	(ICA) ModelsOnly	(ICA) ModelsOnly	(ICA) ModelsOnly

ACCESSORIES

Spark PlugWrench	1 ea.	1 ea.	1 ea.
Mobility/Wheel Kit	All Models	All Models	All Models
Battery (Not Included)	See Battery Chart	Not Included	See Battery Chart

Comments

1 = Temporary Power available for

LIFAN POWER USA

VOLTAGE SELECTOR SWITCH

Features and Functions found only on your
EnergyStorm and ProSeries units below 8000 watts and on the LF8500iEPL-RV Model
Get the full power from your generator

The voltage selector switch provides you with the maximum usable power from your generator for more flexibility and use from your unit. It allows you to choose between using both the 120v and 240v power or choose the 120v only by simply engaging the switch to the 120v only choice on the selector switch. Most appliances powered and used by a smaller generator, 8000 watts and below, are 120v appliances. All generator alternators, the power source, create their power in 2 legs, 1 from each side of the generator's alternator. 1 leg feeds the 120v side while the other feeds the 240v side. As an example the ES5500 watt unit provides 2750 watts of power to the 120v receptacles and 2750 watts of power 240v receptacle. With the Voltage Selector Switch you can feed both legs of your alternators power to the 120v receptacles and get the full use of the generator's power, in this case 5500 watts to the 120v receptacle, when you are not using any 240v appliances as well as getting the required additional amperage that some appliances require.

A 2nd benefit of the Voltage Selector Switch is the even wear on your alternator and brushes when the unit is in use, increasing the useful lifetime of your generator. If you are mainly utilizing and powering only 120v appliances with your generator then you are over working the 120v side of the alternator while not utilizing or creating any load on the 240v side of the alternator, thereby causing an imbalance in the wear of the alternator, an essential part of any generator.

Our 3 position Voltage Selector Switch gives you the versatility of choice. When in the 120v position it is supplying the full wattage to the 110v receptacles, when in the neutral position all receptacles are neutral, no power, and when in the 240v position is supplies even power to both sides, 110v receptacles and the 220v receptacle. Get the full power from you unit.

LF4250EPL-CA and LF7250IPL-CA models are equipped with a Voltage Selector Switch to get Maximum Performance and power from your unit. See location of Voltage Selector Switch on controls & Features section on page 9.

COPPER VS ALUMINUM

All Lifan Power USA Generators come with Solid Copper Windings
Compare and Save - The only Generators Available with Quality Copper Windings

Copper vs. Aluminum Coil Windings.....The performance difference between copper and aluminum coil windings lie in the physical and resistance property's between the two materials. Copper is a more efficient conductor, able to transmit the same current with less cross section area. Aluminum requires more cross section area to do the same job... Aluminum has lower mass than copper and the aluminum wire, with its larger cross section area, is not as efficient as copper. Well designed enclosures usually give better performance with copper windings in both quality and output than aluminum. This means it takes more power to reach optimal efficiency with aluminum.

LIFAN POWER USA

Controls andFeatures

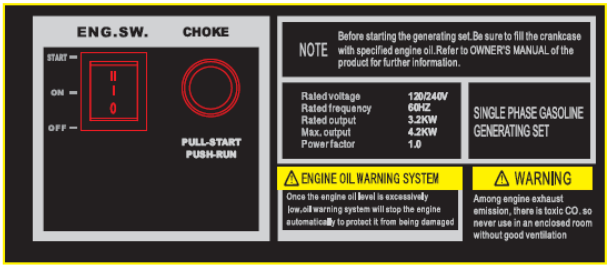

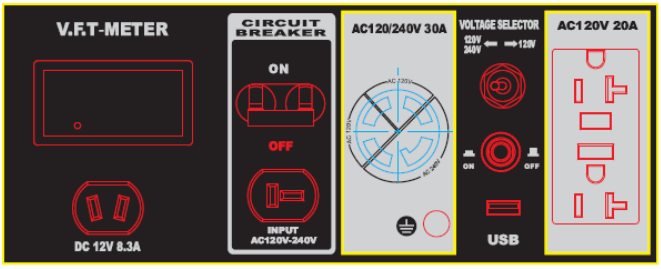

LF4250

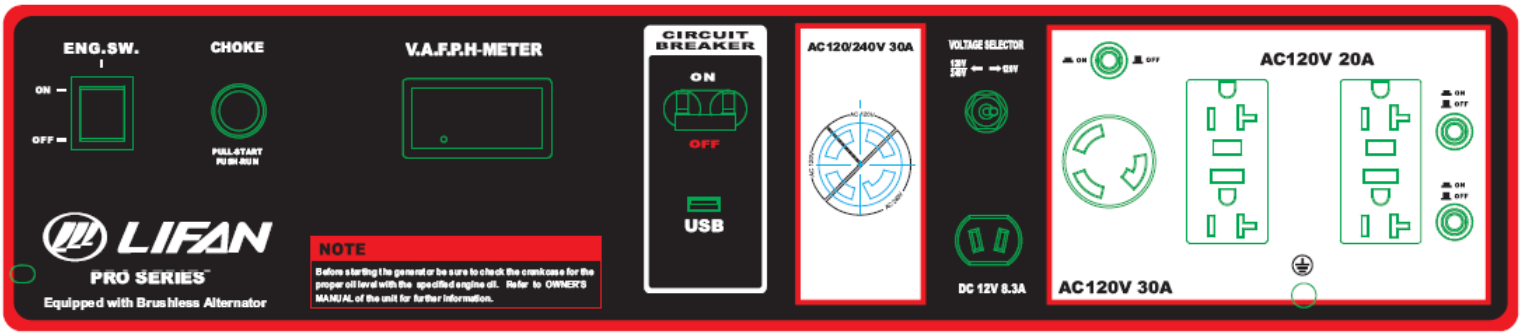

LF7250

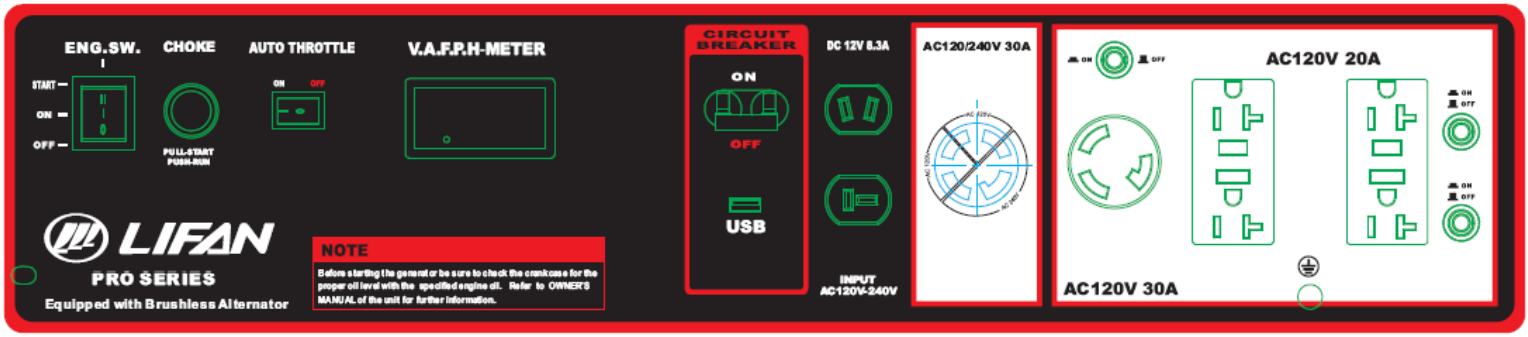

LF8750

Controls and Features Of Unit

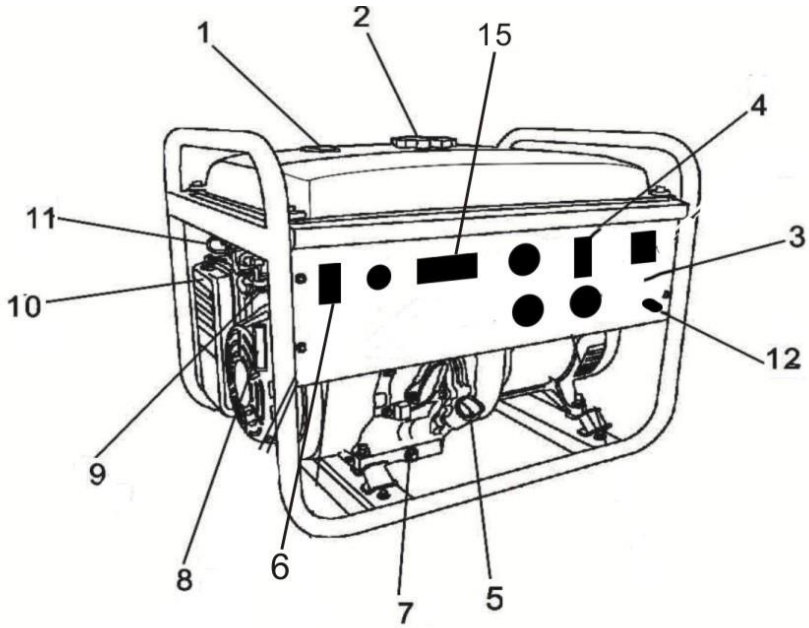

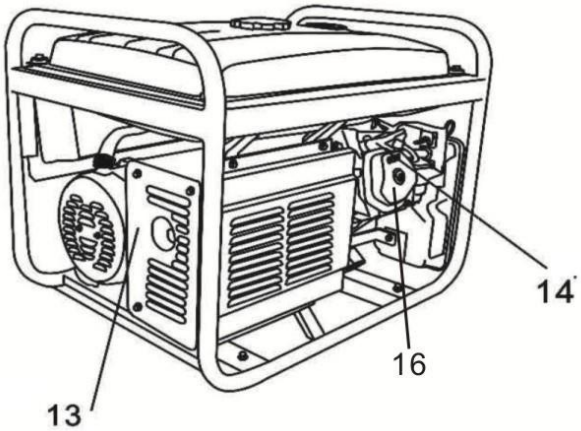

Legend

1. **Fuel Level Sensor** – Displays Current Fuel Level
2. **Fuel Tank Cap** – Vented Fuel Cap Must be Properly Installed at all times duringOperation
3. **Receptacle Panel** – See Product Specifications for Individual Model
4. **Double Pole Circuit Breaker (AC)** – Protects Receptacles & GeneratorfromOverload
5. **Crankcase Oil Dipstick/Oil Fill Hole Cap** – Check/Fill EngineOil
6. **On/Off Switch** – Rocker Style; Set to "ON" to start Engine & "OFF" to ShutOff Engine; Key Switch Model: Turn to "START" to Crank Engine & "OFF" to ShutOff Engine
7. **Crankcase Oil Drain Plug** – Remove to Drain Oil fromCrankcase
8. **Recoil Starting Handle** – Pull Handle to Rotate Engine forStarting.
9. **Fuel Cock (Valve)** – Turn to "OFF" to Terminate Fuel Delivery to Engine
10. **Air Cleaner** – Check Maintenance Schedule for Service Intervals
11. **Choke** –Panel Mounted. Pull to Choke, Push to Run
    Before starting cold generator, pull thechokepin outward from generator to activate the choke lever. Afterallowinggenerator to run for a few seconds, push knob inward towardgenerator.
12. **Earth Grounding Stud** – Always connect generator to an EarthGroundingSource. Consult Local Energy Jurisdiction for Code Requirements in yourarea.
13. **Muffler & Muffler Hood** – Exhaust muffler emits combustion gas from engineand lowers the noise level of the generator
14. **Spark plug**
15. **Digital V.F.H Meter -** Records Voltage, Frequency, and Hour Meter during use of units
16. **Valve Cover** – Cover for Overhead Valves designed to be removed periodically for valve adjustments.

Pre-OperatingInstructions:Assembly

Your LIFAN Power USA generator is packaged without fuel and oil. Some assembly is required before operating your LIFAN Power USAGenerator.

For further assistance inassemblingyourgenerator pleasevisit ourwebsite (www.lifanpowerusa.com) orcall 1-866-471-7464option 2, between the hours of 9am-5pm Monday-Friday.

BOXCONTENT:

- Generator
- Accessory Kit
  - 1 ea. --- Spark Plug RemovalTool
  - 1ea. -Nema14-30 Male Twist LockPlug

- Owner's Manual and Warranty Card

- WheelKit(4000-CA, 7250-CA, & 8750IE-CA)
  - 2ea. -Never-Go-Flat Foam Filled Wheels
  - 2 ea. --- Heavy Duty Leg Supports (Shipped Stored Under FuelTank)
  - 1 ea. ---Axle
  - 2 ea. --- FoldingHandle
  - Hardware Bag

UNPACKING THEGENERATOR:

1. Set the Carton on a Flat, Rigid Surface.
2. Remove All Contents from Carton EXCEPT Generator.
3. Open Box Completely by Cutting Each Corner from Top toBottom.
4. Leave Generator on the Remainder of the box until Wheel Kit isinstalled.
5. Locate all Box Contents and Place them Beside the Generator. (Some Items maybe Packed within the voids of the Generator itself)

Pre-OperatingInstructions:Assembly

WHEEL KITINSTALLATION:

The Following Tools are needed to Install WheelKit:

- Safety Glasses
- 8mm-14mmWrench Set
- 8mm-14mmRatchet& Socket Set
- 17mm Ratchet & Socket

Wheel Kit InstallationDirections:

NOTE: Install Wheel Kit BEFORE Filling the Generator with Fuel or Oil. Never Tip aUnitthat contains Fuel orOil.

1. Tip Generator so Engine End isup.
2. Slide Axle through both Mounting Brackets.
3. Place a Wheel on both Sides as shown in “Assembly Diagram.”
4. Securely Tighten Wheel nuts with the 17mmSocket.

5. Tip the Alternator End of the Generator up.
6. Place the Support Legs under the Frame Brace as shown in “Assembly Diagram.”
7. Secure with the provided Cap Screws and Hex Nuts. Securely tightenusing 12mm Ratchet and Socket.

Pre-OperatingInstructions:

Assembly Diagram

ASSEMBLY DIAGRAM

Energy Storm Portable models 3500 TO 8000 WATTS

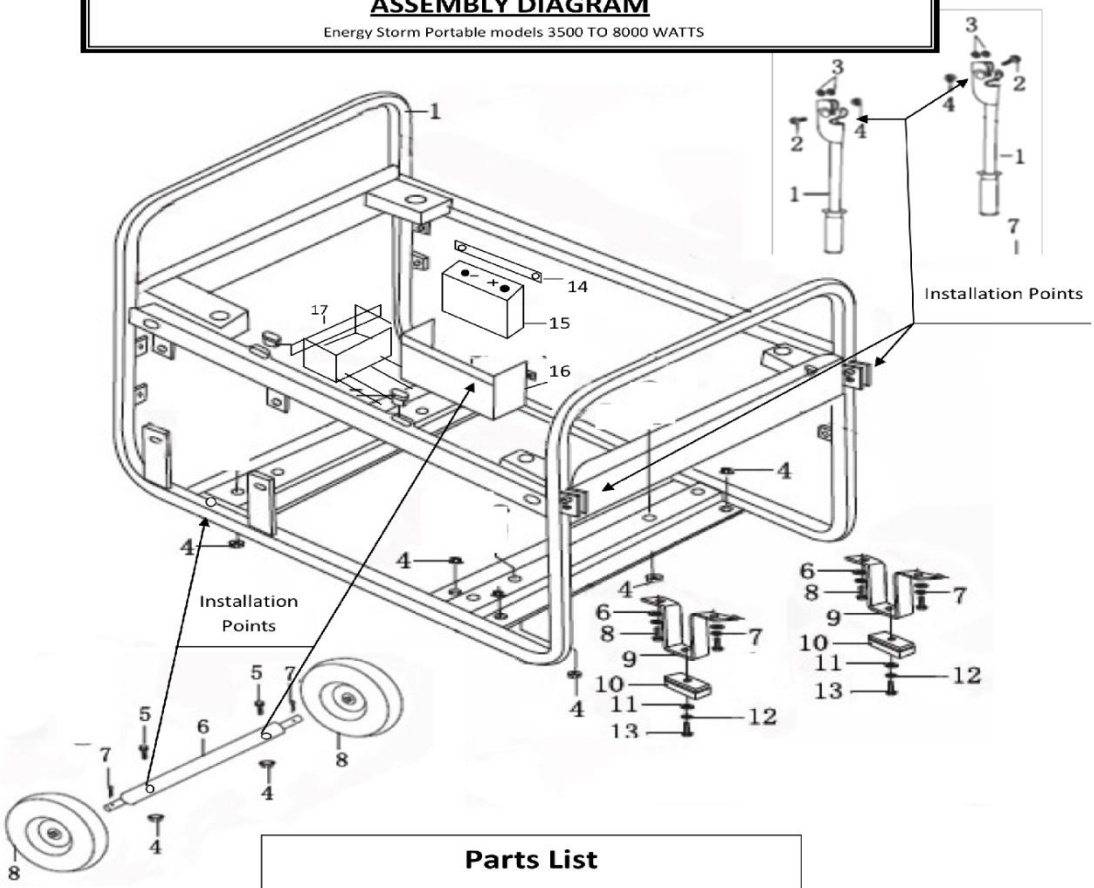

Parts List

1.	Handle	2 pcs.	9	Front Leg	2 pcs
2.	Flange bolt 8mm×45mm	2 pcs.	10	Leg Skid Pad	2 pcs
3.	Nylon Washers.8mm	4 pcs.	11	Flat washer 6mm	2 pcs
4.	Nut M8	12 pcs	12	Spring washer 6mm	2 pcs
5.	Flange bolt 8mm×60mm	2 pcs	13	Flange bolt 6mm×16mm	2 pcs
6.	Axle	1 pc.	14	Battery hold down strap	1 pcs
7.	Cotter Pin	2 pcs	15	12 volt Battery (not included)	1 pc.
8.	Tire & Wheel Assembly	2 pcs	16	Battery Box 5000- 8000 watt models	
			17	Battery Box 3500 watt models	

⚠ CAUTION! Assemble generator before adding fuel or oil.

Pre-OperatingInstructions:Battery Specifications

The Battery is NOT included with your Platinum Series Generator. These units require an Acid Cell Battery. This battery is used in many applications, such as lawnmowers, ATV's,motorcycles, etc. and can be found at many retailers and dealers including where you purchased this Power Equipment Product. Use the "Battery Specifications" chartbelowto attain the specifications of the necessary battery. Or, use the "CrossReferenceModels" chart below to match up with the manufacturer's model number withthebrand battery available at your local retailer.

BATTERYSPECIFICATIONS				
Generator Model	**Length(inch)**	**Width(inch)**	**Amp(hr s)**	**DCVoltage (Volts)**
LF4000-CA	5.25in	3in	10	12V

LF7250-CA	5.3125in	3.1875in	12	12V
LF8750iE-CA	5.3125in	3.1875in	12	12V

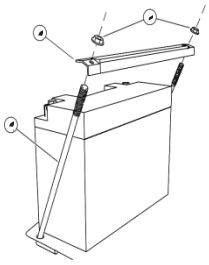

	Warning
	Follow all the battery manufactures' warningsforproper installing of your battery in order topreventdamage to personnel orequipment.

1. Battery leads consist of a Red (hot) lead that connects to the(+) battery post and is connected to the (+) terminal on the starter solenoid and a Black lead which is connected to the(-) negative batteryterminal and the framemounting bolt.
2. Connect the Red (hot) terminal to the battery.
3. Connect the Black (negative) terminal to thebattery.

Pre-OperatingInstructions:GeneratorSetup

CAUTION: Any attempt to start the generator before it has been properly servicedmayresult in engine failure and voidwarranty.

ADD ENGINE OIL: Refer to the diagramsbelow.

1. Place generator on level surface.
2. Clean area around Oil Hole Dipstick/Plug & Unscrew Oil Hole Dipstick/Plug.
3. Fill with appropriate type and amount. Refer to Chart below forrecommended oil type based on Environmentaltemperature.
   NOTE: Refer to “Product Specifications” section for universal recommendedoil type and oil amount.

4. Replace Oil Hole Dipstick/Plug and tighten securely.
5.

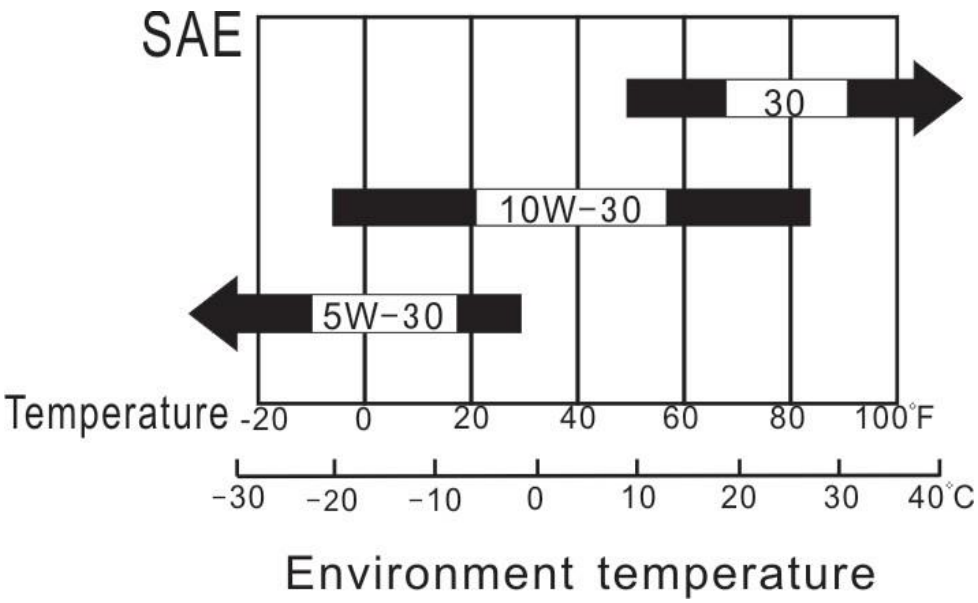

Pre-OperatingInstructions:GeneratorSetup

(Continued)

WARNING!

Fuel and its vapors are extremely flammable and explosive.

WHEN ADDINGFUEL

- Turn generator off and let it cool for a minimum of three minutes before removing fuel cap. Turn and remove capslowlyin order to relieve residual tankpressure.
- Always fill the fuel tank with the unitoutdoors.

ADD FUEL: Refer to Controls and Features section fordiagrams.

1. Clean area around fuel cap, then remove fuel cap.
2. Pour fresh, clean regular automotive grade unleaded fuel with a minimumoctane rating of 85 into fuel tank. Do NOT mix fuel with oil. Fuel musthaveethanol blend of 10% or less. Pay close attention to the storage requirements of these fuels. Do NOT overfill fuel tank.
3. Install the fuel cap. Rotate the fuel cap clockwise until it is in its lockedposition. Wipe away any spilled fuel.

Pre-OperatingInstructions:

GeneratorSetup

CAUTION:

Alcohol-blended fuels (gasohol,ethanol, ormethanol) will attractmoisture, which leads to separation and formation of acids during storage. Acidicgas can damage the fuel system of an enginewhile in storage. To avoid engine problems, the fuel system should betreated with a fuel stabilizer or drained if thegeneratorwill not be started for thirty (30) days. If using a fuel stabilizer, follow themanufacturer's recommended instructions for use. Always use stabilizerwith a full tank of gasoline.

Always drain old fuel and use fresh fuel before next use. If you do not use afuel stabilizer, the fuel system must be drained and cleaned. Drain the fuel tank andstartthe engine, allowing it to run until all fuel lines and carburetor are drained offuel.

Before restarting the carburetor the float bowl must be removed and cleaned ofanydebris.

NEVER use chemical solvents or cleaners in the fuel tank or damage mayoccur.

CHECK AIR CLEANERELEMENT:

Refer to “Air Cleaner Maintenance” in the Maintenance section of this Owner’s Manual to ensure Air Cleaner Element is in operablecondition.

GROUNDING THE GENERATOR:

Refer to Controls and Featuressection.

Connect theGround Terminal on thegenerator to an acceptable source of electrical ground, such as a copper-grounding stake, usingcopperelectrical wire with a minimum diameter of 16gauges.

Operation ofGenerator

HOW TO USE YOURGENERATOR

WARNING!	
	Runninggeneratorgivesoffcarbonmonoxidegas.Itisodorless,colorless,andhighly toxic. **Breathingcarbonmonoxidegascanleadstofainting,nauseaormayresultindeath.**

- Onlyoperategeneratoroutdoors.
- Preventexhaustgasfromentering,throughwindowsdoorsorventilationintakes,anyconfinedareas.

STARTING THE ENGINE: Refer to the Controls and Featuressection.

CAUTION!

Neverstartorshutoffthegeneratorwithelectricalloadsconnectedandintheoperationalmode(onswitchactivated).

1. Unplug all electrical loads from the generator.
2. Make sure the generator is in a level position.
3. Open the fuel cock by turning the fuel cock to the “ON” position.
4. For cold engine starts only: Pull the choke BUTTON to the engaged position pertheinstruction label on the generator main frame.

PULL START (RECOIL) ONLYMODELS:

5. Place the On/Off switch in the “ON” (I)position.
6. Grasp starter handle and pull slowly until resistance is felt. Then pull the cord rapidly with a full arm stroke. Allow the rope to return slowly. Do NOT allowtherope to snap back against housing.
7. Once theengineruns for3-5 seconds, push thechoke pin in to disengage.

Operation ofGenerator

HOW TO USE YOURGENERATOR

ELECTRICT STARTMODELS:

5. For Electric Start Models, push the rocker switch to the “ON” position. Push rocker switch to start position and hold until engine starts or for NO MORE than10engine rotations. If the engine does NOT start, wait 15 seconds and repeat starting procedures.
6. Once theengineruns for3-5 seconds, push thechoke pin in to disengage.

NOTE (all models): If generator does not start within FIVE pulls, check thecrankcaseoil level. The engines “Low Oil Alarm System” may be activated and preventingtheengine from starting.

CONNECTING ELECTRICALLOADS:

1. Ensure engine is started before plugging in any electricalappliance.
2. Plug in desired 120 Volt loads to the120 VoltU-Ground and 240 Volt loads to the 240 Voltreceptacles. Always plug appliances into thegeneratorwith appliance in its “OFF” position.
3. Do NOT connect 240 Volt loads to the 120 Volt receptacles.
4. Onlyconnects single-phase60Hertz loads.
5. **DO NOT OVERLOAD THE GENERATOR. FOLLOW THE PROVIDED “GENERATORWATTAGE REFERENCE WORKSHEET” TO DETERMINE THE RUNNINGAND STARTING WATTAGE OF YOUR EQUIPMENT REFER TO THEPRODUCT SPECIFICATIONS TO ENSURE YOUR GENERATOR WILL OPERATE THEDESIRED EQUIPMENT.**

NOTE: Use the running and starting wattage provided by the equipmentmanufacturerif available. If not available, use provided “Generator Wattage Reference Worksheet.”

Operation of Generator

HOW TO USE YOURGENERATOR

LOW OIL ALARMSYSTEM:

This model is equipped with a Low Oil Alert System designed to avoid enginedamagefrom insufficient oil in the crankcase. The Low Oil Alarm System will stop theengineautomatically before the oil level in the crankcase drops below safe operating levels.

STOPPING THE GENERATOR:

Refer to Controls and Features section fordiagram.

EMERGENCYSHUTDOWN

1. Turn the Fuel Valve to “OFF”position

NORMALSHUTDOWN

1. Unplug all electrical loads or turn the main breaker to the “OFF”position.
2. In order to stabilize internal equipmenttemperatures, allow theengine to run for3-5minutes under no load.
3. If the generator will not be in use for more than 7 days, turn the fuel valve to the“OFF” position and allow the unit to run until the fuel in the carburetor isused and the engine shuts itself off.
4. Turn the ignition switch to the “OFF” position.
5. Allow unit to cool to ambient temperature before storage or transportation.
6. Always transport the generator with the fuel valve in the “OFF” position. Failureto do so will result in damage to the engine.

Operation ofGenerator

HOW TO USE YOURGENERATOR

USAGE IN HIGH ALTITUDEREGIONS:

In regions with highaltitude,the standardcarburetorproducesoverlydense combinationsoffuel and air, whichresult in decreasedengine performance and increasedfuel consumption. To maintain highengine performance at high altitudes, install a high altitudecarburetor main spray nozzle andre-adjust theadjusting screw foridlespeed. For usagein regions with an altitudeofover4,527ft (1380m), contact yourdealer toreplace thestandardcarburetor and make needed adjustmentsin advance. Even with a properhigh altitudecarburetorspray nozzle installedintheengine,the poweroutput oftheenginewill dropabout3.5%with every1000ft (305m)increasein altitude. If thestandardcarburetor jets are not replaced and adjustedfor usagein high altitude, theincreasedaltitudeeffect will be even moresevere.

NOTE: Usage of the generator in regions with lower altitude than thehigh altitudecarburetor spraynozzle is applicable, may result in decrease of engine performance. Theengine may become overheated and over-lean combination of fueland air produced maycausesevere damage to theengine.

TRANSFERSWITCHCONNECTIONS - Only allow Professional Electricians

The Lifan ProSeries generator is wired with theneutral bonded to ground. If you are connecting yourgenerator to a transfer switch, the electrician must firstdetermine what type transfer switch is being used.Transfer switches for this equipment are either two-pole orthree- poletypes.

A two-pole transfer switch will not switch theneutral from the generator to the service panel. Thatmeans the generator will be grounded to the service panel.To use the generator with two-pole transfer switches,the electrician will need to change the neutral frombonded to floating.

This is done by removing the jumper wire thatconnects the alternator ground to the alternator neutral.Remove the

jumper wire and retighten the connections.Keep the jumper wire with the owner's manual in case itis needed for future use when not connected to atransfer switch.

Storing theUnit

STORAGE

Before long term storage of your power equipment product, typically 30 days ormore,perform thefollowing:

1. Set the fuel cock (valve) to the “OFF” position.
2. Let the unit continue to run until it stops itself, burning all of the fuel in thefuel system.
3. Turn the ignition switch to the “OFF” position.
4. Drain theengine oil in accordancewith the “Oil ChangeProcedures” in this Owner’s Manual’s Maintenance section. Do NOT re-fill with oil until ready to use again.
5. Remove the Spark Plug in accordance with the “Spark Plug Maintenance” in theOwner’s Manual’s Maintenance section. Spray a lubricant, such as WD40®,into the Spark Plug hole to lubricate the top of the piston and walls of the cylinder. Replace the Spark Plug.
6. Pull starter rope until resistance is felt. This will place the valves in theclosed position.
7. Add the recommended amount of fuel stabilizer, in accordance with theamountrecommended by the manufacturer of the fuel stabilizer, to the unusedgasolineleft in the fueltank.
8. Place the unit in a clean, dry, and securelocation.
9. Coverwith “LIFANWaterProof Generator Cover,” ItemNumber LF100-69600 not included) orcanvas/vinyl tarpaulin. Do NOT operateunitwith cover installed.

Maintenance

MAINTENANCESCHEDULE	
PROCEDURE	TIME
Engine OilCheck	EachUse
Replace Engine Oil	After Each 40 Hours of Use (For Initial Breakin – After First (1st) 10 Hours ofUse
Air Cleaner FilterCheck	EachUse
Air Cleaner FilterReplacement	When Needed or After Every 50 Hoursof Use
Air CleanerWash	WhenNeeded
Spark Plug	When necessary or within 100 hrs of run time
ValveClearance	Check&Re-- - adjust annually or after300 Hours of Use
Fuel Tank	Replace Every 3 Years Based on Condition

NOTE: Refer to Following Procedures for Proper Method to PerformMaintenance

OIL CHANGE PROCEDURES: Refer to Controls and Feature section fordiagram. **Periodic Maintenance of your engine oil should be performed after each 40 hoursof use of you Power Equipment Product. Check your engine oil level prior to eachuse.**

1. Start your engine and let it warm up to get the oil warm and thinner. Turn theengine On/OFF switch to the "OFF" position. Turn Fuel Valve to the"OFF" position.
2. Remove the oil cap/dipstick by turning counter clockwise. Remove the oil drain plug located below the oil cap/dipstick utilizing the appropriate tools.

USE CAUTION: THE OIL MAY BEHOT.

3. Drain the engine oil into an approved receptacle and discard in accordancewith all Federal and State Regulations. Never dump the used engine oil on theground or into drains, only discard in an approved manner. Check with your local authorities to determine the regulations in yourarea.

Maintenance

WARNING! AVOID SPLASHING OF HOT OIL; IT CAN BURN YOU ANDCAUSESEVEREINJURY.

4. After oil is completely drained,replace oil drain plug and tighten with appropriate tools. Replace oil with the proper oil foryour product. Refer to the Pre-Operating Instruction:Generator Setup section forexact fill requirements.

   Always use your dipstick to check the oil level and only fill to the full mark onthedipstick. Never overfill the engine as this can cause damage to the unit and void warranty.

5. Replace the dipstick/oil cap on theengine.
6. Shake generator to ensure the float in the Oil Alert System is free.

PROPER MAINTENANCE OF THE UNIT WILL INCREASE THE LIFE OF YOURPRODUCT. THE OIL MUST BE CHANGED ON A REGULAR BASIS FOR PROPER OPERATION,AND RELIABILITY AND TO ALSO MAINTAIN THE WARRANTY ON THISPRODUCT.

AIR CLEANERMAINTENANCE:

1. Remove the clip (item 9 in “Air Cleaner A” below) or the wing nut (item 7 in “AirCleaner B” below) to remove and check the air filter element.
2. For Sponge Type Air Filters, wash with soap and water whencontaminated. Squeeze excess liquid from air filter element, and allow the air filter element to dry. lubricate with a few drops of oil. ForPaper TypeAir Filters,replacewith thecorrectAir Filter foryour unit. They areavailable at your dealer or from LIFANPowerUSA. Orderyourfilter by calling toll free866-471-7464.

Maintenance

3. Re-Install the air filterelement into the airfilters housing.

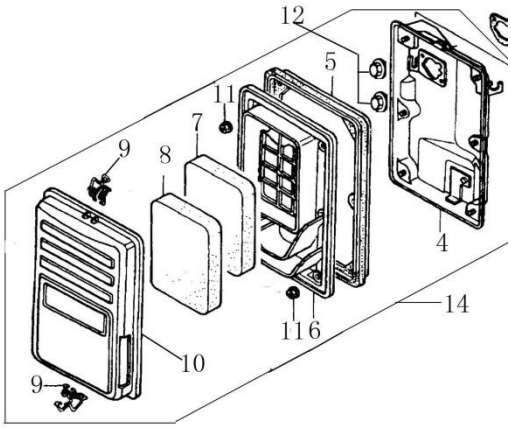

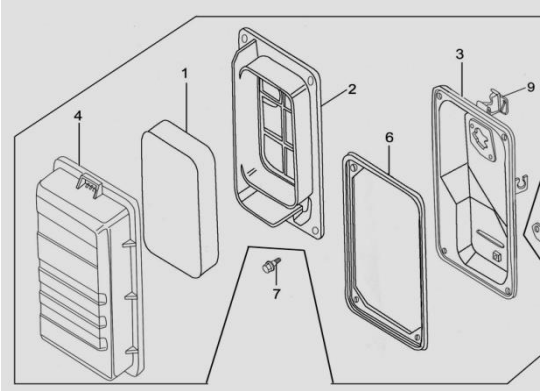

Air Cleaner A

Air Cleaner

Maintenance

SPARK PLUGMAINTENANCE:

1. Remove Spark Plug Cap (refer to "Spark Plug Cap Removal" figure below.)
2. Remove Spark Plug with socket and handle supplied with your unit (referto "Spark Plug Removal" figure below.)
3. Clean anycarbon build-up around the SparkPlug.
4. Check the SparkPlugGap and adjust if necessary. 0.30-inch gap.
5. Lubricate the threads of theSparkPlugwith anti-seizecompound orengine oil.
6. Re-install the SparkPlug and SparkPlug Cap.

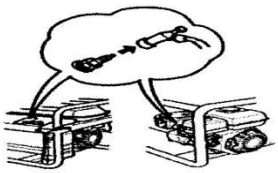

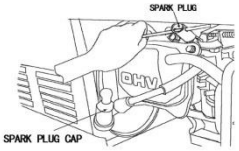

Spark Plug CapRemoval

Spark PlugRemoval

FUEL SYSTEMMAINTENANCE:

NOTE: Periodically you can get sediment or trash in your Carburetor Bowl. Usethefollowing procedures to clean:

1. Turn the fuel cock (valve) to the "OFF" Position.
2. Remove the carburetor bowl by removing the mounting bolt located atthebottom of the bowl.

3. Dump out the old fuel and sediment into an approved container and clean carburetor bowl thoroughly.

Maintenance

FUEL SYSTEM MAINTENANCE(continued):

4. Fit a newrubberwasher into place and re-attach fuel bowl to thecarburetor.

diagram below) and eitherclean orreplace the fuel filterelement. Re-assemble the fuelfilterelement (refer to “Fuel Filter ElementAssembly” diagram below.)

Fuel Filter ElementRemoval

Fuel Filter ElementAssembly

Troubleshooting

IF THE ENGINE WILL NOTSTART:

1. Check to ensure switches are in the “ON” position. (Both unit and engine)
2. Check engine oil level. Your unit possesses a Low Oil Alarm System that willnotallow your engine to start if the oil is below safe operating levels. This featureis installed to increase the life of your engine and prevent engine damage. If oil level is low, fill to the full mark on dipstick. Refer to the ProductSpecifications for exact oil type and amounts.
3. Check the fuel level to insure adequate fuel. Add fuel ifnecessary.
4. Remove and inspect the spark plug for cleanliness and proper electrode gap. If needed,

clean or replace the spark plug. Refer to Spark Plug Maintenance in theMaintenance section of the Owner's Manual for proper procedure.

5. If your unitwill still NOT start after performing the abovechecks,call our customer hotline at LIFANPowerUSA Toll Free1-866-471-7464OPTION 2.

NOTE: Periodically on the initial start-up or after the unit has been stored for a long period of time, the float for the "Low Oil Alarm System" will stick to the bottom of your oil pan. Locate thetwo (2) wires to the Low Oil Sensor Diode (refer to figure on theright) located on the side of theengine block. Unplug thesewires and,**onlyafter ensuringthe engineisfullof oil,** start theengine and allow to run until warm (normally20minutes, as this will heat the oil and release the float on the Low Oil Alert System). Then re-plug thewires to theterminals on the Low Oil Alarm SendingUni

UNIT DOES NOT PROVIDE ELECTRICALCURRENT:

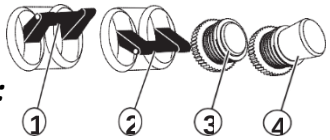

1. Plug in a small appliance or tool to test. 1.On 2.Off/Tripped 3.On 4.Off
2. Check if theAC (or DC) CircuitBreaker is in the "ON" position. If not, place in "ON" position. If equipped with a GFCIreceptacle,re-setGFCIBreaker by pushing in thereset button in themiddle of theGFCI's faceplate (this must be donewith theenginerunning).
3. If your unit still does NOT produceelectricity after performing the previous checks,call LIFANPowerUSA at 1-866-471-7464, OPTION 2.

UNIT DOES NOT PROVIDE ELECTRICAL CURRENT(continued):

1. If your unit still does NOT produceelectricity after performing theprevious checks,call LIFANPowerUSA at 1-866-471-7464 OPTION2.

Wattage Chart

GENERATOR WORKSHEET

	RUNNING WATTAGE REQUIREMENTS	ADDITIONAL STARTING WATTAGE REQUIREMENTS
HEATING/COOLING:		
Furnace Fan, gas or fuel oil furnace		
1/8 horsepower	**300**	**500**
1/6 horsepower	**500**	**750**
1/4 horsepower	**600**	**1000**
2/5 horsepower	**700**	**1400**
3/5 horsepower	**875**	**2350**
Central Air Conditioner		
10,000 BTU	**1500**	**2200**
20,000 BTU	**2500**	**3300**
24,000 BTU	**3800**	**4950**
32,000 BTU	**5000**	**6500**
40,000 BTU	**6000**	**6700**
HEATING/COOLING:		**SUB-TOTAL:**
KITCHEN		
Refrigerator, Average	**600**	**2200**
Dish Washer - Cool Dry	**700**	**1400**

Dish Washer - Hot Dry	**1450**	**1400**
Clothes Dryer - Gas	**700**	**1800**
Clothes Dryer - Electric	**5750**	**1800**
Microwave Oven, 750W	**750**	**800**
Washing Machine	**750**	**2300**
Coffee Maker	**850**	**0**
Toaster 2-slice	**1100**	**0**
Toaster 4-slice	**1650**	**0**
Electric Skillet	**1500**	**0**
Electric Range 6-in. element	**1500**	**0**
Electric Range 8-in. element	**2100**	**0**
Freezer	**2500**	**2200**
KITCHEN		**SUB-TOTAL:**
APPLIANCES		
Lights- Wattage	**Actual:**	
VCR	**50**	**0**
Heating Pad	**65**	**0**
Radio	**100**	**0**
Television - Black & White	**100**	**0**
Television - Color	**300**	**0**
Dehumidifier	**400**	**0**

Electric Blanket	**400**	**0**
Garage Door Opener - 1/4HP	**550**	**1100**
Garage Door Opener - 1/3HP	**725**	**1400**
Well Pump - 1/3 hp	**750**	**1400**
Well Pump - 1/2 hp	**1000**	**2100**
Sump Pump - 1/3 hp	**800**	**1300**
Sump Pump - 1/2 hp	**1050**	**2150**
Vacuum Cleaner - Standard	**800**	**0**
Vacuum Cleaner - Deluxe	**1100**	**0**
APPLIANCES		**SUB-TOTAL:**
COMMERCIAL PRODUCTS:		
1/4" Drill	**300**	**300**
Jigsaw	**300**	**300**
Electric Weed Trimmer	**500**	**500**
Router	**1000**	**1000**
Belt Sander	**1000**	**1000**
Disc Sander	**1200**	**1200**
Chain Saw	**1200**	**1200**
Worm Drive Saw	**1560**	**3100**
12" Concrete Cutter	**1800**	**3600**
7 1/4" Circular Saw	**1500**	**3000**

Disc Grinder	**2000**	**4000**
Air Compressor, Average	**2000**	**4000**
COMMERCIAL PRODUCTS:		**SUB-TOTAL:**

CONVERTING AMPS OR HORSEPOWER INTO WATTS

If necessary, uses these formulas:

Watts = Amps x Volts

Running Watts* = Horsepower x 932** (for motors)

Remember, this worksheet lists **average power requirements**a particular manufacturer's device may use more or less than the listed wattage.

- Add a 10% correction factor to your totals to help overcome this uncertainty.

If your customer plans to operate devices that use electric motors, list **both** the **starting** and **running requirements** of each.

- **Starting requirements** of some devices maybe significantly higher than their **running requirements**. This **higher** demand must be considered when estimating your power needs. Some small, universal motors — which do not draw a heavy starting load (drills, small saws, blenders, etc.) — require very little extra current for starting.

When listing items that use motors, take them in the order of highest-to-lowest starting requirements, as shown in the example below. Motor A, for instance, has a **starting requirement** of 2,600 watts, so it's listed first, followed by Motor B at 1,300 watts, and Motor C at 1,000 watts.

MOTOR/ DEVICE	STARTING WATTS	RUNNING WATTS
Motor A	2,600	850
Motor B	1,300	600
Motor C	1,000	750

NO ELECTRIC MOTORS

If your list *does not* include any devices that use electric motors, simply add the power **(running)** requirements of all the items on your list to obtain the maximum power needed.

- For example, if you intend to use only an electric skillet, a 100-watt light and a heating pad (as shown below), the maximum power requirement would be 1,655 watts. In this case, a generator like the EF2600, that can produce 2,300 watts **rated** output, is recommended.

DEVICE	WATTS
Electric Skillet	1,500
Light	100
Heating Pad	65
Total:	**1,665**

NOTE: The EF1600's **rated** output is 1,400 watts, so its output would be too low to handle this load on a continuous

basis.

LIMITED WARRANTY POLICY

This warranty is limited to the following Lifan Power and Storm Series products that are distributed by the

EquipSource LLC, dba LIFAN POWER USA, located at 2205 Industrial Park Road, Van Buren, AR 72956. Effective date is 4/20/2010.

LENGTH OF WARRANTY				
	Residential Use**			Commercial/Rental***
PRODUCTS COVERED	1st Year	2nd Year	3rd Year	Warranty not to exceed 300 hrs. Or terms listed below.
Walk Behind Mowers	Full unit parts and labor	Full unit parts only	Engine: parts only	Full unit: 3 months parts and labor
Water Pumps	Full unit parts and labor	Full unit parts only	Engine: parts only	Full unit: 12 months parts and labor
Generators/Inverter Generators	Full unit parts and labor	Full unit parts only	Engine: parts only	Full unit: 12 months parts and labor
Pressure Washer Engines	Full unit parts and labor	Full unit parts only	Engine: parts only	Full unit: 12 months parts and labor
Pressure Washer Pumps*	Full unit parts and labor	NA	NA	Full unit: 12 months parts and labor
Gasoline Engines	Full unit parts and labor	Full unit parts only	Engine: parts only	Full unit: 12 months parts and labor
Gasoline Powered Welders	Full unit parts and labor	Full unit parts only	Engine: parts only	Full unit: 6 months parts and labor

** Residential Use is defined as items that are for personal use.

*** Commercial/Rental use is defined as any usage for income producing or other business related uses.

In order to qualify for the limited warranty the product(s) must be purchased in North America from an authorized EquipSource, LLF d/b/a Lifan Power USA dealer or a dealer authorized by EquipSource to sell Lifan products. This warranty is non-transferable and applies only to the original purchaser. The supplied "Warranty Registration Card" must be completed and on file with American Warranty Service (at the supplied address), at the time that any warranty claim is made. The "Warranty Registration Card" must be submitted with a receipt of purchase which clearly states the date of purchase and where the purchase was

made.

During the warranty period (stated above) Equipsource, LLC and/or American Warranty Service will repair or replace, at its' option, any part that is proven to be defective in material or workmanship under normal usage. Repairs and/or replacement will be made without charge for parts or labor. All parts found to be defective must be returned to EquipSource or American Warranty Service at our direction. Upon reception of the parts a judgment as to the validity of the warranty claim will be determined. All parts replaced under warranty or any replacement of the complete unit will be considered part of the original product and replacement of any product, and any warranty on those parts or replacement unit will coincide with the original warranty.

To obtain Warranty Service, call our Customer Service Hotline at 1-866-471-7464 and press 2 for Warranty Service at which time you will be transferred to the technicians at American Warranty Service. In lieu of this you may call directly to American Warranty Service at 888-926-4313 to be directly connected to a repair specialist.. At Equipsource's discretion; Equipsource may elect to replace a defective unit. In this case the end user is responsible for all shipping and handling charges associated with the exchange and as stated above the warranty will coincide with the date of the original purchased unit.

LIMITED WARRANTY POLICY

This warranty is not valid for products or parts affected or damaged by accident, collision, normal wear, fuel contamination, abuse, neglect, misuse, alteration and/or unsuitable use or unauthorized parts replacement. Mower decks and blades are specifically not warranted for impact or abrasive damage. Warranty becomes void if the customer fails to install, maintain, and/or operate the product in accordance with the instructions and recommended actions of Lifan set forth in the owner's manual. EquipSource, LLC disclaims any responsibility for time loss or loss of usage of the product, transportation, commercial loss, or any other incidental or consequential damage. Prior to any warranty service an approval code must be issued to the service center in order for the warranty claim to be valid. Any implied warranties are limited to the duration of this written limited warranty. This warranty gives you specific legal rights, and you may also have other rights, which may vary from state to state.

This warranty specifically excludes the use of any Lifan Power Equipment or Storm Series power equipment as the "Sole Source of Power" for "off the power grid applications" and this warranty will become null and void for units used for this purpose and manner. This warranty specifically excludes the use of any Lifan Power Equipment or Storm Series power equipment for the purpose of powering Life Support devices, Life Support appliances, Medical devices, and/or Medical appliances. EquipSource, LLC will not be held responsible for any damage due to the use of any Lifan or Storm Series power equipment for these purposes.

OWNER'SRESPONSIBILITY

ToensuretroublefreewarrantycoverageitisimportantthatyouregisteryourLifangenerator by phone at 1-866-471-7464, or by fillingout andreturningtoLifan Power USAthewarrantyregistrationcardsuppliedwithyourgenerator.Registeringyourproduct

confirms your warranty coverage and provides a direct link between you and Lifan Power USA if we find it necessaryto contactyou.

Your receipt for purchase including date, model and serial number must be maintained and registered to receive service from an Authorized Service Dealer for warranty service. Proof of purchase rests solely with you, theoriginal purchaser.

You must demonstrate reasonable care and use, and follow preventive maintenance, storage, fuel and oilusage asprescribedintheoperator'smanualforyourLifan Powerunit.Shouldaproductdifficultyoccur, youmust,atyourexpense,deliverorshipyourLifan Power ProductunittoaLifanAuthorizedService Dealer for warranty repairs (which must occur within the applicable warranty period), and arrange for pick-upor return of your unit after the repairs have been made. For the warranty assistance from a Lifan Authorized Service Dealer nearest toyou, callLifan'sautomatedphoneat1-866-471-4764 Option 2. ShouldyourequireassistanceorhavequestionsconcerningLifan Power USAWarranty Statement, you can contact us through the web at www.lifanpowerusa.com or call toll free 1-866-471-7464.

LIMITED WARRANTY POLICY

EXCLUSIONS

- Lifan Power Equipment that utilize non-Lifan replacementparts.

- Failure to perform “Periodic Maintenance” as required and specified in the supplied “Owner’s Manual.”
- Costs of normal maintenance and adjustments.
- Failures caused by any contaminated fuels, oils, or lack of proper oillevels.
- Repairs or diagnostics performed by individuals other than Lifan authorized dealers not authorizedin writing byLifan.
- Failures due to normal wear and tear, accident, misuse, abuse, negligence or improper use.
- As withall mechanical devices, the Lifan engines need periodic part(s) service and replacement to performas designed. This warranty will not cover repair when normal use has exhausted the life of a part(s) orengine.
- Failures caused by any external cause or act of God, including but not limited to, collision, theft,vandalism, riot, war, fire, freezing, lightning, earth-quake, windstorm, hail, water, flood, tornado, orhurricane or any occurrence outside of normal use and activity .
- Damage related to any animal infestation to include rodent and/or insectinfestation.
- Products that are modified or altered in a manner not authorized in writing byLifan.
- Any incidental, consequential or indirect damages caused by defects in materials or workmanship, orany delay in repair or replacement of the defectivepart(s).
- Failure due tomisapplication.
- Telephone, cellular phone, facsimile, internet access, or other communicationexpenses.
- Expenses related to “customer instruction” or troubleshooting where no manufacturing defect isfound.
- Overnight freight or special shipping costs for replacement part(s).
- Overtime, holiday or emergencylabor.
- Starting batteries, fuses, light bulbs and enginefluids.

LIMITED WARRANTY POLICY

DISCLAIMER OF IMPLIEDWARRANTIES

This limited warranty is in lieu of all other expressed or implied warranties, including any warranty of the units fitness for any particular use and any implied warranty of MERCHANTABILITY otherwise applicabletoLifan Power Equipmentanditsaffiliatedcompaniesshallnotbeliableforany special, incidental or consequential damage, including lost profits. There are no warranties extended other thanas providedherein.Thislimitedwarrantymaybemodifiedonlybyl Lifan Power USA.Anyimpliedwarrantiesallowedbylaw shall be limited in duration to the terms of the express warranty provided herein. Some states do not allowlimitations onhowlonganimpliedwarrantylasts,sotheabovelimitationmaynotapplytoyou.Somestatesdonotallowthe exclusion or limitation of incidental or consequential damages, so the above limitation may not apply to you.This warrantygivesyouspecificlegalrights.Youalsohaveotherrightsfromstatetostate.Lifan'sONLYLIABILITY SHALL BE THE REPAIR OR REPLACEMENT AS STATED ABOVE. IN NO EVENT SHALL Lifan BELIABLE FOR ANY INCIDENTAL OR CONSEQUENTIAL DAMAGES, EVEN IF SUCH DAMAGES ARE A DIRECTRESULTOF Lifan's NEGLIGENCE. Some states do not allow the exclusion or limitation of incidental orconsequential damages,sotheabovelimitationmaynotapplytoyou.Thiswarrantygivesyouspecificlegalrightsandyoumay also have other rights from state tostate.

OWNER'S WARRANTYRESPONSIBILITIES:

As the outdoor equipment owner, you are responsible for performance of the required maintenance listed inyour owner'smanual.EquipSource, LLC d/b/a Lifan Power USArecommendsthatyouretainallreceiptscoveringmaintenanceon youroutdoorequipment. Lifan Power USA will not deny your warranty coverage based solely on your lack of receipts for service however, the condition of the equipment upon arrival at the service center will determine the warrantable nature of the product.

As the outdoor equipment owner, you should however be aware that Lifan Power USA may denyyour warranty coverage if your outdoor equipment or a part has failed due to abuse, neglect, or improper maintenanceor unapprovedmodifications.

Youareresponsibleforpresentingyouroutdoorequipmenttoa Lifan Power EquipmentAuthorizedWarranty Service Dealer as soon as the problem exists. The warranty repairs should be completed in a reasonable amountof time.

If you have any questions regarding your warranty rights and responsibilities, you should contact Lifan Power USA or American Warranty Service Representative at 1-866-471-7464 Option 2 Warranty and Service or at the following address Lifan Power USA, 2205 Industrial Park Road, Van Buren, AR 72956 or by contacting us through www.lifanpowerusa.com.

APPENDIX

Wiring Diagram

LF7250-CA

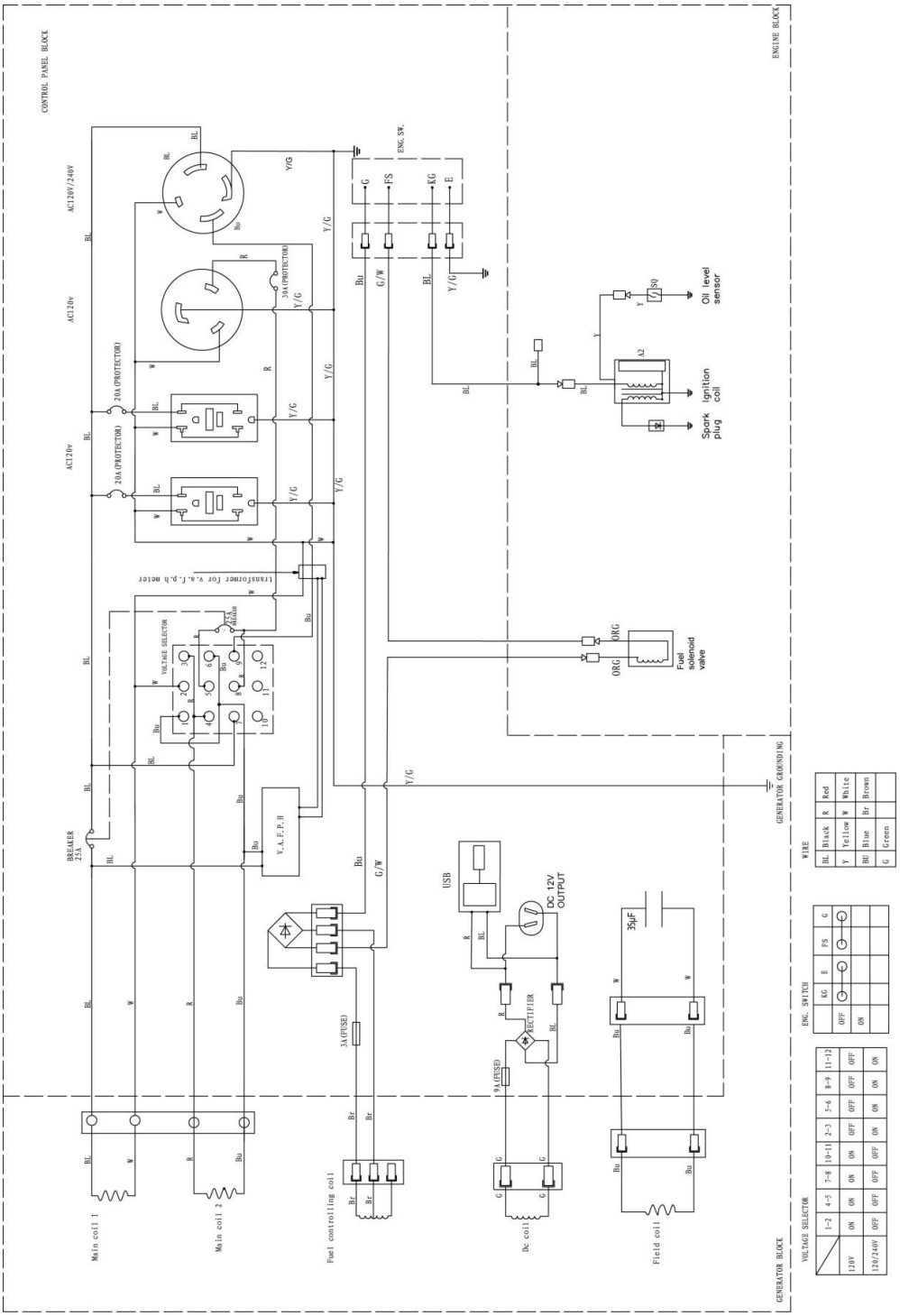

LF7250-CA

Exploded View& Parts

Part	Description	q’ty	Part	Description	q’ty
1	GENERAL GASOLINE ENGINE	1	46	Throttle unit	1
2	Bolt M6×12	29	47	Spring, mixture adjustment screw	1
3	Cylinder head cover Assy	1	48	Mixture adjustment screw	1
4	Gasket, cylinder head cover	1	49	Idle adjustment screw	1
5	Air duck	1	50	Choke unit	1
6	Pusher	2	51	Mixture chamber body	1
7	Lock nut	2	52	Main nozzle	1
8	Sleeve	2	53	Float needle	1
9	Valve rocker	2	54	Main jet	1
10	Adjusting bolt for valve gap	2	55	Float	1
11	Valve rocker assy	2	56	Float chamber gasket	1
12	Pusher guide	1	57	Float chamber	1
13	Bolt M8×55	4	58	Float chamber drain Screw	1
14	Intake valve guide	1	59	Washer	2
15	Exhaust valve guide	1	60	Float chamber	1
16	Circip	2	61	Screw	1
17	Valve spring	2	62	Carburetor Assy	1
18	Spring seat, intake valve	1	63	Air cleaner gasket	1
19	Spring seat, exhaust valve	1	64	Air cleaner stay	1
20	Cap	1	65	Nut M6	2
21	Stud M8×34	2	66	Hinge	2
22	Exhaust gasket	1	67	Air cleaner case	1
23	Spark plug F6TC	1	68	Gasket	1

24	Support panel assy	1	69	Retainer, filter element	1
25	Washer Φ5	2	70	Filter element	1
26	Nut M6	1	71	Air cleaner cover	1
27	Lock bolt	1	72	Bolt	4
28	Regulating	1	73	Air cleaner Assy	1
29	Back spring	1	74	Drain plug	2
30	Fine regulating	1	75	Washer	2
31	Pulling rod	1	76	Bearing 6205	1
32	Regulating spring	1	77	Oil seal, crankshaft	1
33	Screw M5×35	1	78	Crankcase	1
34	Regulating control system	1	79	Regulating sway bar	1
35	Set pin Φ10×16	2	80	Washer	2
36	Exhaust valve	1	81	Split pin	1
37	Intake valve	1	82	Nut M10	1
38	Gasket, cylinder head	1	83	O-ring 13×1.4	1
39	Cylinder head Assy	1	84	Oil sensor	1
40	Lead wind cover	1	85	Regulating shaft	1
41	Stud M6×96	2	86	Snap ring	1
42	Inlet gasket	1	87	Washer, driven gear	1
43	Connecting block	1	88	Driven gear, regulator	1
44	Carburetor gasket	1	89	Pin	2
45	Choke switch	1	90	Flying block	2

Part	Description	q’ty	Part	Description	q’ty
91	Washer	1	140	Bolt M5×12	3
92	Sliding sleeve	1	141	Supporting plate	1
93	Driven gear, regulator assy	1	142	Muffler stay	1
94	Extension spring	1	143	Flange bolt M8×16	3
95	Camshaft Assy	1	144	Flange bolt M6×14	2
96	Tappet	2	145	Muffler	1
97	Pin	1	146	Muffler guard	1
98	Limit position panel	1	147	Muffler gasket	1
99	Woodruff key	1	148	Exhaust pipe comp.	1
100	Drive gear	1	149	Bolt M8×25	2
101	Crankshaft	1	150	Nut M8	2
102	Timing driving gear	1	151	Muffler Assy	1
103	Crankshaft assy	1	152	Flywheel	1
104	Shank	1	153	Ignition coil	1
105	Connecting rod cover	1	154	Screw M6×25	2
106	Bolt	2	155	Engine stop cable	1
107	Connecting rod	1	156	Ignition coil	1
108	Piston pin circlip	2	157	Spark plug cap	1
109	Piston	1	158	Ignition coil assy	1
110	Piston pin	1	159	Flywheel	1
111	Piston ring (Ⅰ)	1	160	Flywheel fan	1
112	Piston ring (Ⅱ)	1	161	Starting flange	1

113	Side rail	2	162	Nut M14×1.5	1
114	Expander	1	163	Diode	1
115	Scraper ring set	1	164	Fan hood assy	1
116	Piston ring set	1	165	Set screw	1
117	Gasket, crankcase	1	166	Spring lid	1
118	Bearing 6205	1	167	Friction spring	1
119	Set pin	2	168	Ratchet	2
120	Crankcase cover	1	169	Ratchet spring	2
121	Oil seal, crankshaft	1	170	Starter rolls	1
122	Seal	1	171	Spiral spring	1
123	Dipstick	1	172	Casing	1
124	Dipstick with seal	1	173	Rope	1
125	Bolt M8×32	6	174	Pulling handle	1
126	Dust plate	1	175	Bolt M6×8	3
127	Stator cover	1	176	Recoil starter	1
128	Generator fan	1	177	Recoil starter assy	1
129	Rotor comp.	1	178	Plastic clip	1
130	Bearing 6202-2RS	1	179	Crankcase side plate assy	1
131	Stator Assy	1	180	Bolt M6×22	1
132	Generator stay	1	181	Fuel tank	1
133	Brush Assy	1	182	Fuel filler cap comp.	1
134	Bolt M5×14	3	183	Carbon canister	1
135	Voltage regulator	1	184	Fuel filter	1
136	Plain washer	1	185	Fuel sensor	1

137	Bolt M8×180	1	186	Screw M5×10	2
138	Flange bolt M6×125	4	187	Flange bolt M6×22	4
139	Generator end cover	1	188	Washer	4

Part	Description	q’ty	Part	Description	q’ty
189	Cushion	4	243	Cushion φ8.5	4
190	Outlet pipe（φ9×φ4.5×130）	1	244	Road wheel	2
191	Tube clip	3	245	Wheel axle	1
192	Fuel cock	1	246	Cotter pin φ4×25	2
193	Fitting brush, fuel tank	4	247	Bolt M8×60	1
194	Gasket, fuel sensor	1	248	Rubber pad, frame	1
195	Stripe, fuel tank	1	249	Grommet	1
198	Control panel	1	250	protective covering(1)	1
199	Timer	1	252	Charge coil	1
200	Voltage switch	1	253	Clamper, cord	1
201	V socket	1	254	Bolt M6×35	2
202	T socket	1	255	Relay, start-up	1
204	Spring washer ¢4	1	256	Rotor comp.	1
205	Screw M4×10	1	257	Starting clutch	1
206	Bridge Rectifier 20A,800V	1	258	Starting motor Assy	1
209	Circuit protector	1	259	Base, starting	1
216	Boot, switch wire	1	260	Housing, starting clutch	1
217	Connector	3	261	Driven gear	1
218	Consent 20A	1	262	Brush comp.	4

219	Consent 30A	1	263	Stator Assy	1
220	Consent 20A	2	264	Spring, brush	4
221	Wire clamp	2	265	Reducing gear	1
222	Ignition switch	3	266	Stay, brush	1
224	Control panel case	1	267	Cable, starting motor	1
225	Boot, AC output wire	1	268	Insulator	1
228	Control panel Assy	1	269	Bolt M5×14	2
229	Frame comp	1	270	Screw M4×6	1
230	Bottom rubber A	2	271	Packing ring	1
231	Bottom rubber B	2	272	Screw M5×32	4
232	Flange nut M8	16	273	Nut M6	2
233	Flat washer ¢8	4	274	Bolt M6×35	2
234	Spring washer ¢8	4	275	Spring washer 4mm	3
235	Bolt M6×12	4	276	Screw M4×14	2
236	Backstop	2	277	Washer 4mm	2
237	shock pad 52×40×23	2	278	Set pin 8×14	2
238	Flat washer ¢6	2	279	locknut M5	2
239	Spring washer ¢6	2	280	locknut M6	8
240	Bolt M6×16	2	281	Air outlet joint	1
241	Head beam	2	282	Ventilation tube	1
242	Bolt M8×40	2	283	Pipe clamp 10mm-14mm	1

Wiring Diagram
LF8750iE-CA

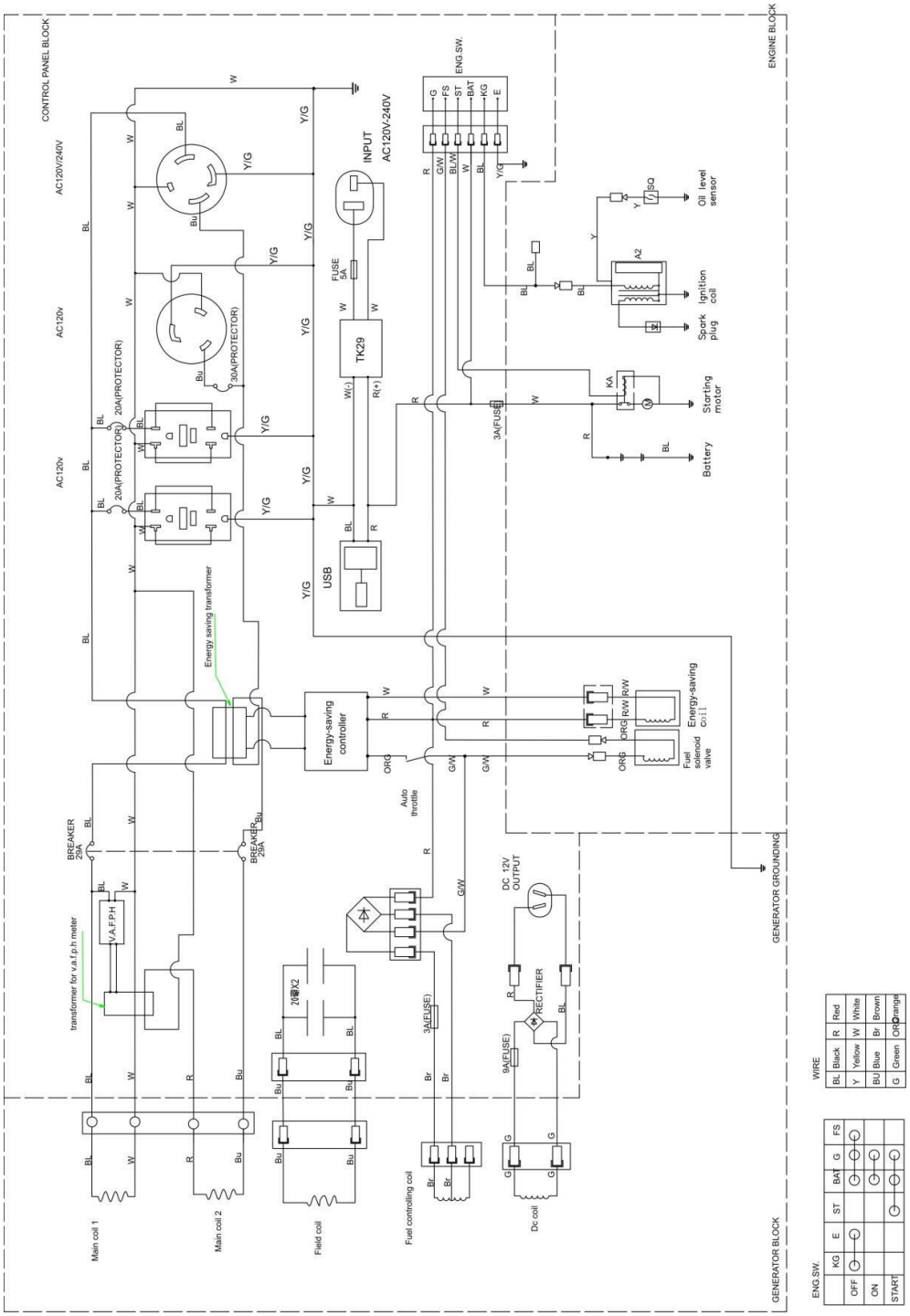

LF8750iE-CA

Exploded View& Parts

Part	Description	q’ty	Part	Description	q’ty
1	GENERAL GASOLINE ENGINE	1	46	Throttle unit	1
2	Bolt M6×12	29	47	Spring, mixture adjustment screw	1
3	Cylinder head cover Assy	1	48	Mixture adjustment screw	1
4	Gasket, cylinder head cover	1	49	Idle adjustment screw	1
5	Air duck	1	50	Choke unit	1
6	Pusher	2	51	Mixture chamber body	1
7	Lock nut	2	52	Main nozzle	1
8	Sleeve	2	53	Float needle	1
9	Valve rocker	2	54	Main jet	1
10	Adjusting bolt for valve gap	2	55	Float	1
11	Valve rocker assy	2	56	Float chamber gasket	1
12	Pusher guide	1	57	Float chamber	1
13	Bolt M8×55	4	58	Float chamber drain Screw	1
14	Intake valve guide	1	59	Washer	2
15	Exhaust valve guide	1	60	Float chamber	1
16	Circip	2	61	Screw	1
17	Valve spring	2	62	Carburetor Assy	1
18	Spring seat, intake valve	1	63	Air cleaner gasket	1
19	Spring seat, exhaust valve	1	64	Air cleaner stay	1
20	Cap	1	65	Nut M6	2
21	Stud M8×34	2	66	Hinge	2
22	Exhaust gasket	1	67	Air cleaner case	1
23	Spark plug F6TC	1	68	Gasket	1

24	Support panel assy	1	69	Retainer, filter element	1
25	Washer Φ5	2	70	Filter element	1
26	Nut M6	1	71	Air cleaner cover	1
27	Lock bolt	1	72	Bolt	4
28	Regulating	1	73	Air cleaner Assy	1
29	Back spring	1	74	Drain plug	2
30	Fine regulating	1	75	Washer	2
31	Pulling rod	1	76	Bearing 6205	1
32	Regulating spring	1	77	Oil seal, crankshaft	1
33	Screw M5×35	1	78	Crankcase	1
34	Regulating control system	1	79	Regulating sway bar	1
35	Set pin Φ10×16	2	80	Washer	2
36	Exhaust valve	1	81	Split pin	1
37	Intake valve	1	82	Nut M10	1
38	Gasket, cylinder head	1	83	O-ring 13×1.4	1
39	Cylinder head Assy	1	84	Oil sensor	1
40	Lead wind cover	1	85	Regulating shaft	1
41	Stud M6×96	2	86	Snap ring	1
42	Inlet gasket	1	87	Washer, driven gear	1
43	Connecting block	1	88	Driven gear, regulator	1
44	Carburetor gasket	1	89	Pin	2
45	Choke switch	1	90	Flying block	2

Part	Description	q’ty	Part	Description	q’ty
91	Washer	1	140	Bolt M5×12	3
92	Sliding sleeve	1	141	Supporting plate	1
93	Driven gear, regulator assy	1	142	Muffler stay	1
94	Extension spring	1	143	Flange bolt M8×16	3
95	Camshaft Assy	1	144	Flange bolt M6×14	2
96	Tappet	2	145	Muffler	1
97	Pin	1	146	Muffler guard	1
98	Limit position panel	1	147	Muffler gasket	1
99	Woodruff key	1	148	Exhaust pipe comp.	1
100	Drive gear	1	149	Bolt M8×25	2
101	Crankshaft	1	150	Nut M8	2
102	Timing driving gear	1	151	Muffler Assy	1
103	Crankshaft assy	1	152	Flywheel	1
104	Shank	1	153	Ignition coil	1
105	Connecting rod cover	1	154	Screw M6×25	2
106	Bolt	2	155	Engine stop cable	1
107	Connecting rod	1	156	Ignition coil	1
108	Piston pin circlip	2	157	Spark plug cap	1
109	Piston	1	158	Ignition coil assy	1
110	Piston pin	1	159	Flywheel	1
111	Piston ring (Ⅰ)	1	160	Flywheel fan	1
112	Piston ring (Ⅱ)	1	161	Starting flange	1
113	Side rail	2	162	Nut M14×1.5	1

114	Expander	1	163	Diode	1
115	Scraper ring set	1	164	Fan hood assy	1
116	Piston ring set	1	165	Set screw	1
117	Gasket, crankcase	1	166	Spring lid	1
118	Bearing 6205	1	167	Friction spring	1
119	Set pin	2	168	Ratchet	2
120	Crankcase cover	1	169	Ratchet spring	2
121	Oil seal, crankshaft	1	170	Starter rolls	1
122	Seal	1	171	Spiral spring	1
123	Dipstick	1	172	Casing	1
124	Dipstick with seal	1	173	Rope	1
125	Bolt M8×32	6	174	Pulling handle	1
126	Dust plate	1	175	Bolt M6×8	3
127	Stator cover	1	176	Recoil starter	1
128	Generator fan	1	177	Recoil starter assy	1
129	Rotor comp.	1	178	Plastic clip	1
130	Bearing 6202-2RS	1	179	Crankcase side plate assy	1
131	Stator Assy	1	180	Bolt M6×22	1
132	Generator stay	1	181	Fuel tank	1
133	Brush Assy	1	182	Fuel filler cap comp.	1
134	Bolt M5×14	3	183	Carbon canister	1
135	Voltage regulator	1	184	Fuel filter	1
136	Plain washer	1	185	Fuel sensor	1
137	Bolt M8×180	1	186	Screw M5×10	2

138	Flange bolt M6×125	4	187	Flange bolt M6×22	4
139	Generator end cover	1	188	Washer	4

Part	Description	q’ty	Part	Description	q’ty
189	Cushion	4	243	Cushion φ8.5	4
190	Outlet pipe（φ9×φ4.5×130）	1	244	Road wheel	2
191	Tube clip	3	245	Wheel axle	1
192	Fuel cock	1	246	Cotter pin φ4×25	2
193	Fitting brush, fuel tank	4	247	Bolt M8×60	1
194	Gasket, fuel sensor	1	248	Rubber pad, frame	1
195	Stripe, fuel tank	1	249	Grommet	1
198	Control panel	1	250	protective covering(1)	1
199	Timer	1	252	Charge coil	1
200	Idle speed switch	1	253	Clamper, cord	1
201	V socket	1	254	Bolt M6×35	2
202	T socket	1	255	Relay, start-up	1
204	Spring washer ¢4	1	256	Rotor comp.	1
205	Screw M4×10	1	257	Starting clutch	1
206	Bridge Rectifier 20A,800V	1	258	Starting motor Assy	1
209	Circuit protector	1	259	Base, starting	1
216	Boot, switch wire	1	260	Housing, starting clutch	1
217	Connector	3	261	Driven gear	1
218	Consent 20A	1	262	Brush comp.	4
219	Consent 30A	1	263	Stator Assy	1

220	Consent 20A	2	264	Spring, brush	4
221	Wire clamp	2	265	Reducing gear	1
222	Ignition switch	3	266	Stay, brush	1
224	Control panel case	1	267	Cable, starting motor	1
225	Boot, AC output wire	1	268	Insulator	1
228	Control panel Assy	1	269	Bolt M5×14	2
229	Frame comp	1	270	Screw M4×6	1
230	Bottom rubber A	2	271	Packing ring	1
231	Bottom rubber B	2	272	Screw M5×32	4
232	Flange nut M8	16	273	Nut M6	2
233	Flat washer ¢8	4	274	Bolt M6×35	2
234	Spring washer ¢8	4	275	Spring washer 4mm	3
235	Bolt M6×12	4	276	Screw M4×14	2
236	Backstop	2	277	Washer 4mm	2
237	shock pad 52×40×23	2	278	Set pin 8×14	2
238	Flat washer ¢6	2	279	locknut M5	2
239	Spring washer ¢6	2	280	locknut M6	8
240	Bolt M6×16	2	281	Air outlet joint	1
241	Head beam	2	282	Ventilation tube	1
242	Bolt M8×40	2	283	Pipe clamp 10mm-14mm	1

Please Read this Owner's Manual Carefully beforeOperatingYour NewGenerator.

ThisOwner'sManualincludestheoperati onandmaintenanceof theLF4000-CA, LF7250-CA

LF8750iE-CA

Thank you for purchasing our Energy Stormgenerator!

For Product Support and Service Please Scan the QR CodeBelowor Visit Us at www.lifanpowerusa.com

OrCallTollFree1-866-471-74

POWERED BY LIFAN CARB/EPA CERTIFIED PRO SERIES

LIFAN POWER USA

LIFAN Power USA is proud to offer it's extensive line of LIFAN Power Equipment!!!!!
LIFAN Power USA is the sole distribution for LIFAN Power Equipment in the United States. LIFAN's unmatched investment in research and development ensures quality engines, generators, pressure washers, and water pumps at an extraordinary value. LIFAN continues to be an innovator and presently holds over 3,000 patents. Product performance has earned LIFAN the reputation of dependability and value in all their international markets.

LIFAN has been manufacturing and selling innovative and value driven products worldwide for over 15 years. LIFAN is distributed in over 100 countries. LIFAN is the largest privately owned company in China with sales over One-Billion Dollars annually and 14,000 employees. As the largest engine manufacturer in China, LIFAN builds more than five million small engines each year. This worldwide presence has been made possible by producing equipment that is durable, reliable, and rugged for any market.

LIFAN Power USA prides itself in standing behind all LIFAN products with our comprehensive warranty policy. LIFAN Power USA continues to offer the highest level or service and support in the industry. With proven performance and unmatched value, LIFAN Power Equipment will always keep you running.

For additional product information of any LIFAN Power Equipment, please visit us at our website – www.lifanpowerusa.com.

LIFAN POWER USA
2205 Industrial Park Rd.
Van Buren, AR 72956
www.lifanpowerusa.com
866-471-7464