Wright PRODUCTS
LIFETIME WARRANTY
STORM DOOR
CONTRE-PORTE
PUERTA DE TORMENTA
INSTALLATION DIAGRAM ON SIDE
ADJUSTABLE MORTISE
MORTAJA
MORTAISE AJUSTABLE
VMT115SN

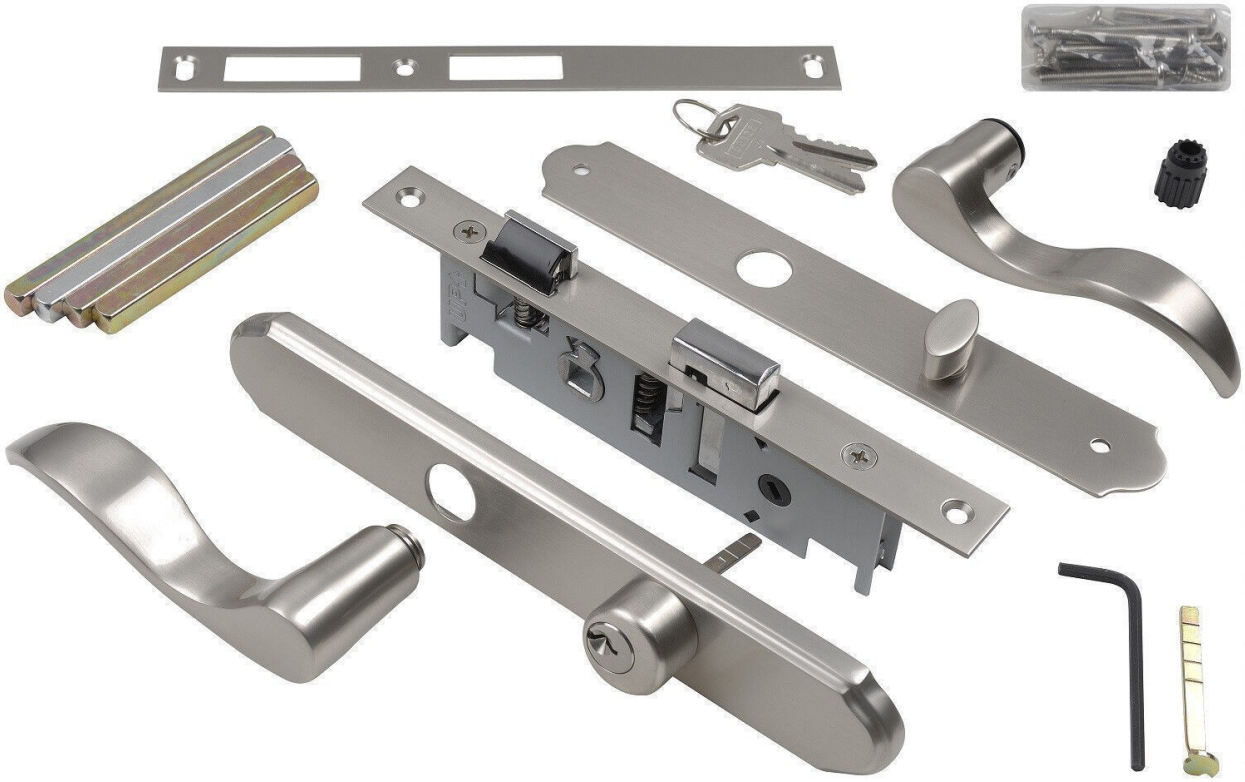

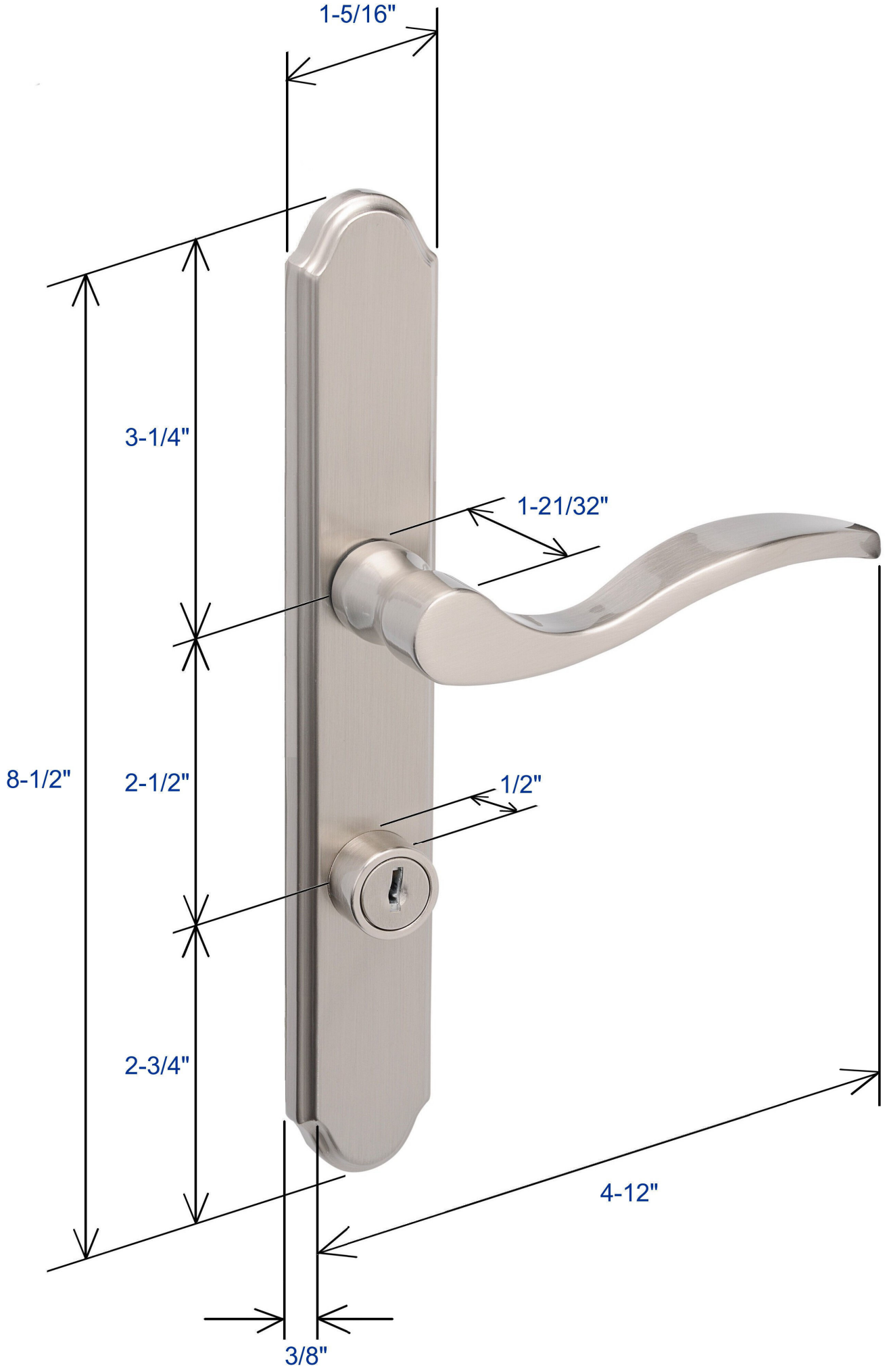
1-5/16"
3-1/4"
1-21/32"
8-1/2"
2-1/2"
1/2"
2-3/4"
4-12"
3/8"

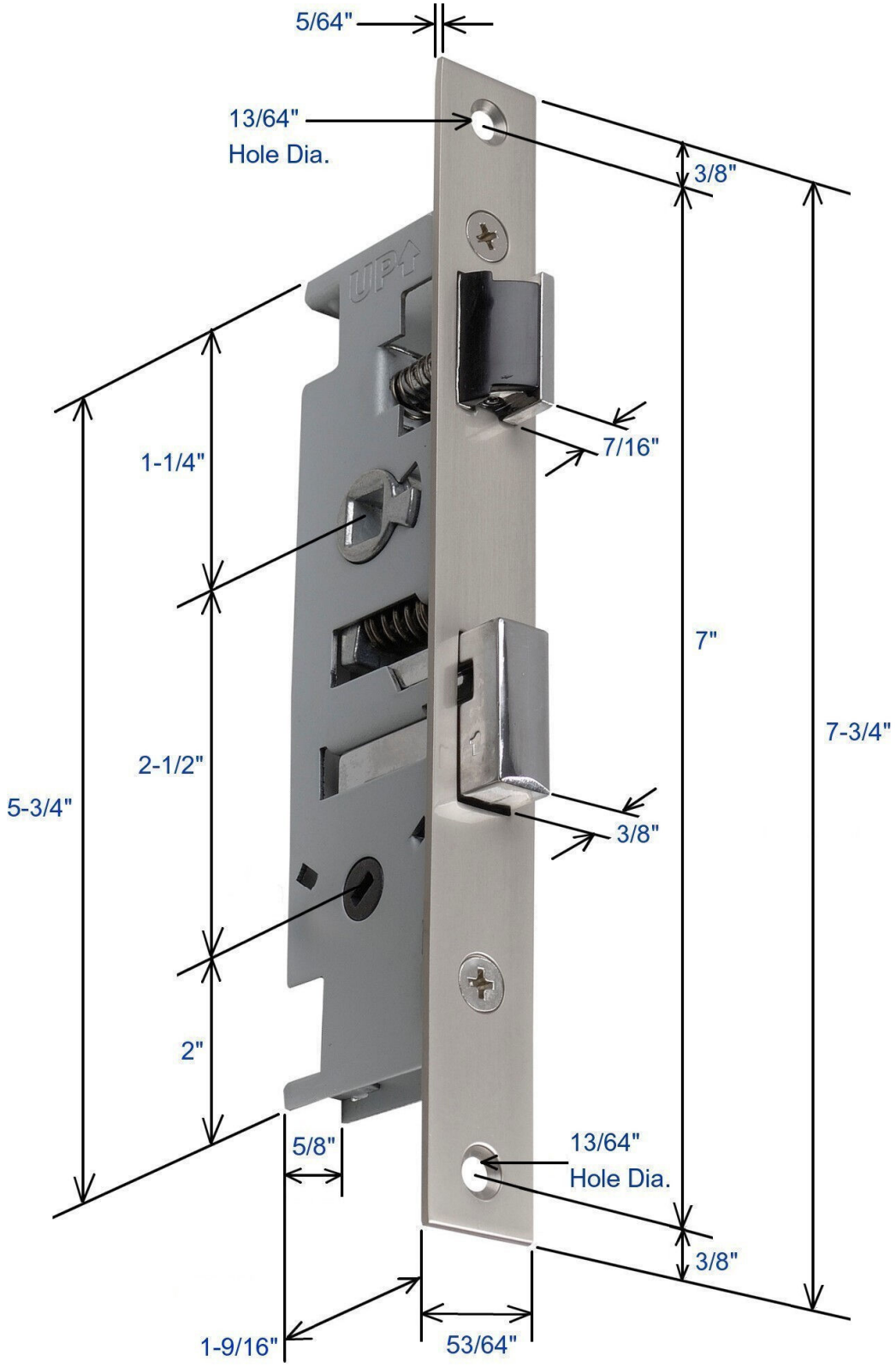
5/64"
13/64"
Hole Dia.
3/8"
UP
1-1/4"
7/16"
7"
7-3/4"
2-1/2"
5-3/4"
3/8"
2"
5/8"
13/64"
Hole Dia.
3/8"
1-9/16"
53/64"

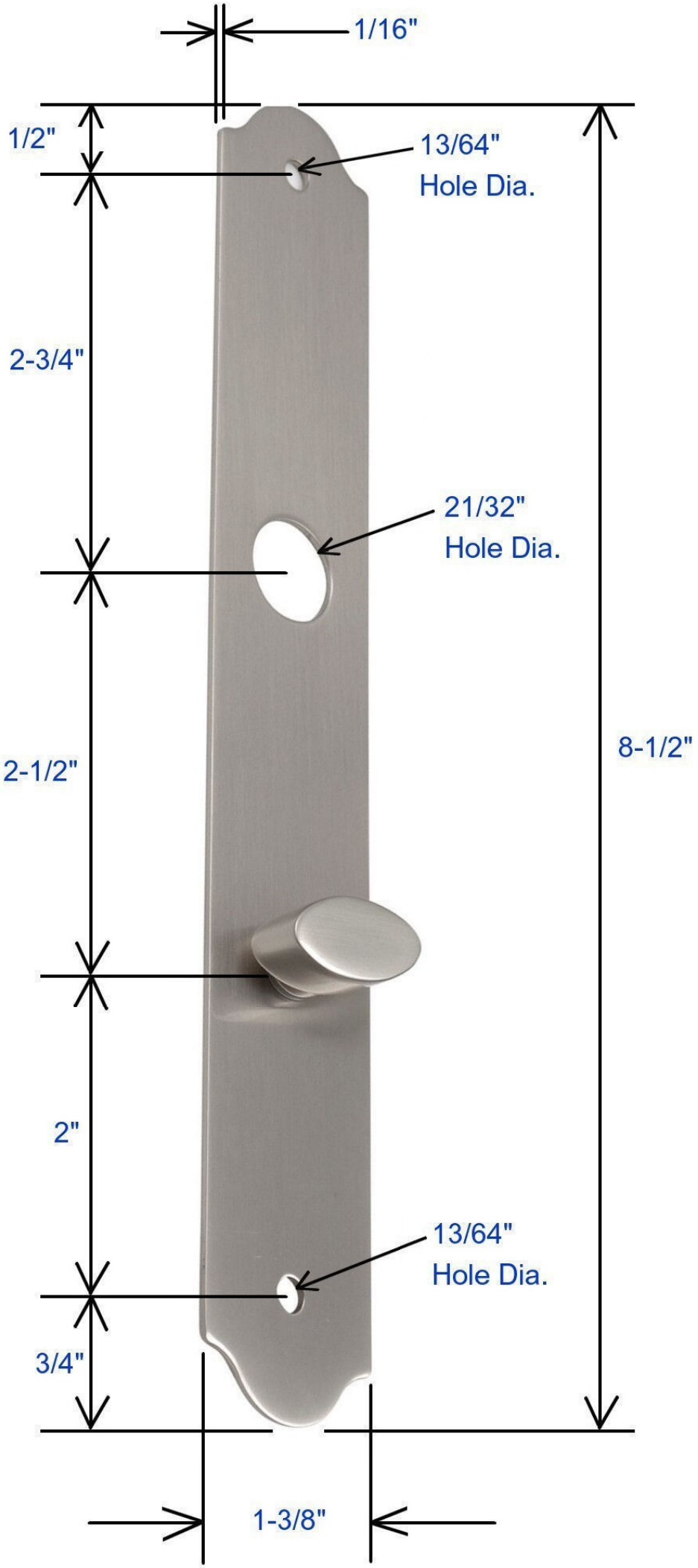
1/16"
1/2"
13/64"
Hole Dia.
2-3/4"
21/32"
Hole Dia.
8-1/2"
2-1/2"
2"
13/64"
Hole Dia.
3/4"
1-3/8"

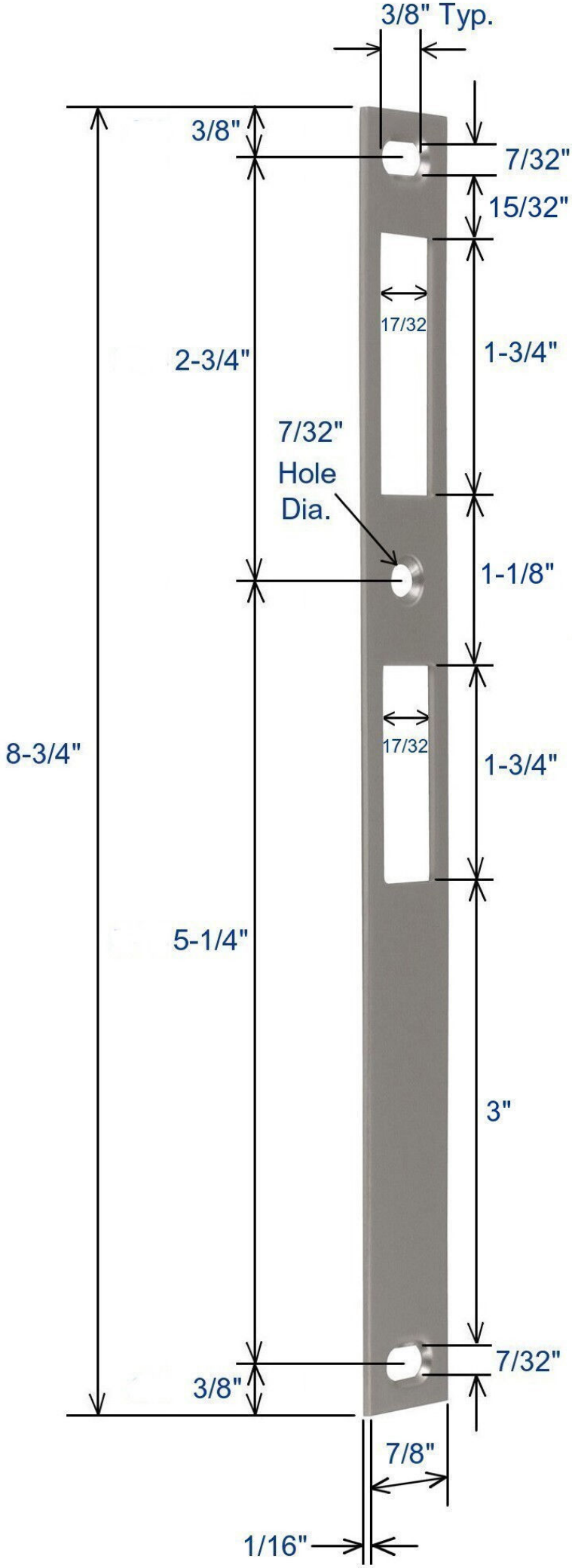
3/8" Typ.
3/8"
7/32"
15/32"
17/32
2-3/4"
1-3/4"
7/32"
Hole
Dia.
1-1/8"
8-3/4"
17/32
1-3/4"
5-1/4"
3"
7/32"
3/8"
7/8"
1/16"

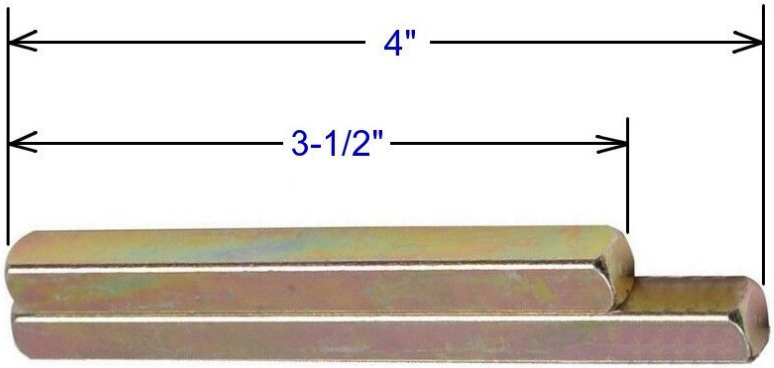
4"
3-1/2"